ADJUSTMENTS

OF THE

TYPE-&-RULE CASTER

FOR THE
TYPE-&-RULE CASTER COURSE
OF THE
MONOTYPE SCHOOL

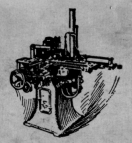

PHILADELPHIA
LANSTON MONOTYPE MACHINE COMPANY
1953

THE MONOTYPE SCHOOL TYPE-&-RULE CASTER ADJUSTMENTS

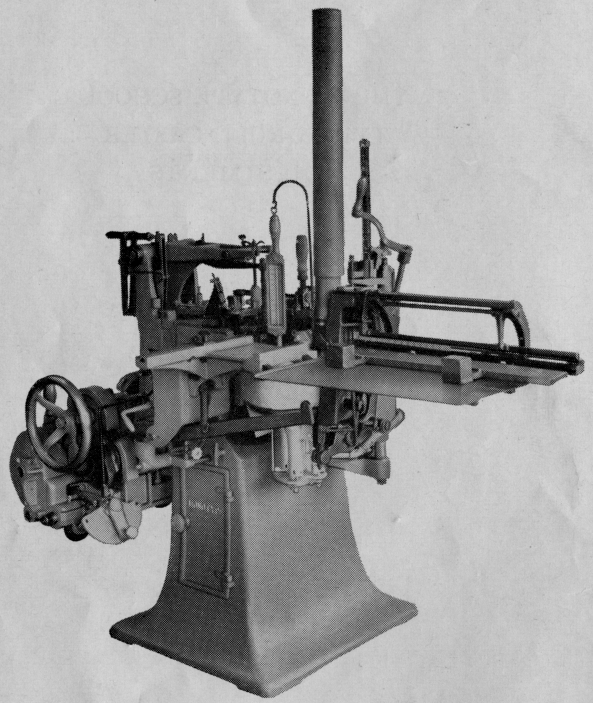

THE MONOTYPE SCHOOL
COURSES OF STUDY

KEYBOARD COURSE

CASTING MACHINE COURSE

RUNNER'S COURSE

COMBINATION KEYBOARD AND
CASTER COURSE

TYPE-&-RULE CASTER COURSE

MATERIAL MAKING MACHINE COURSE

GIANT CASTER COURSE

MONOTYPE-THOMPSON TYPE-CASTER COURSE

TYPE-&-RULE CASTER ADJUSTMENTS

Adjustments are given in the order in which they are made when assembling the MACHINE after it has been dismantled.

TYPE-&-RULE CASTER ADJUSTMENTS

THE TYPE-&-RULE CASTER can be used to cast sorts of any size from 5- to 36-point inclusive.

Sorts from 5- to 12-point are cast with standard composition MOLDS, and cellular MATRICES held one at a time in a special MATRIX HOLDER. For casting type of these body sizes the adjustments of the TYPE-&-RULE CASTER are made the same as the standard adjustments of the COMPOSING MACHINE when casting type in justified lines, and the standard TYPE CHANNEL BLOCKS of the COMPOSING MACHINE are used.

To cast sorts larger than 12-point a few changes in the standard adjustments are made and the Display MATRICES and MOLDS are used. These Display MATRICES are placed in the MATRIX HOLDER one at a time and a sufficient quantity of each character is cast before changing the MATRIX.

To cast type from the Display MOLDS it is necessary to make changes from the standard adjustments for type of smaller size (5- to 12-point).

First, the speed must be reduced; large type cannot be cooled as rapidly as small, and must remain longer in the MOLD.

Second, to handle large type the stroke of the TYPE CARRIER must be increased.

Third, the fixed TYPE CHANNEL BLOCK must be replaced by a special TYPE CHANNEL BLOCK to handle the large type.

Fourth, the stroke of the MOLD BLADE must be increased, since the MOLD must be capable of opening 36-points setways.

Fifth, to furnish a greater volume of metal a greater PUMP capacity is required.

Sixth, the pressure of the CENTERING PIN on the MATRIX must be increased, since the pressure of the metal acts on a larger area in casting large type.

Seventh, a special holder for Display MATRICES is required.

In this book the adjustment of the MACHINE for casting type from 5- to 12-point is first given and then follows the change in adjustments necessary to cast type larger than 12-point, that is, the Display Type.

Remember that in changing from casting small type to casting large type (or the reverse) the NOZZLE, PISTON, fixed TYPE CHANNEL BLOCK, and MATRIX HOLDER must be changed, and seven changes must be made in the adjustments as follows: TYPE CARRIER, MOLD-BLADE OPERATING ROD, CENTERING PIN, PUMP-BODY LIFTING SPRING, PISTON (two), and NOZZLE.

The adjustments in each case are first given in full detail with illustrations that enable the novice to follow them through with practically no assistance. These details are followed by a concise summary of the vital points of the adjustment from which the expert operator at a glance can refresh his memory. Even the expert, however, will be interested in, and in many cases benefit from reading the detailed adjustments.

A clear comprehension of all these adjustments is an essential qualification of a good operator.

The adjustments in this book are for the TYPE-&-RULE CASTER and are arranged in the order which the student follows when assembling and adjusting the MACHINE, having previously dismantled it. Adjustments for the COMPOSING MACHINE are published in a separate book.

All references to "right," "left," "front," and "rear" in these adjustments assume the operator looking at the MACHINE from the front or galley side of the MACHINE where he stands when operating.

TYPE CARRIER

The TYPE CARRIER receives the type from the MOLD and carries the type to a point opposite the TYPE CHANNEL so that the type may be delivered through the TYPE CHANNEL to the GALLEY.

When the character has been cast and the MATRIX CASE has lifted, and freed the type from the MATRIX, the TYPE CARRIER moves to the right into position to receive the type

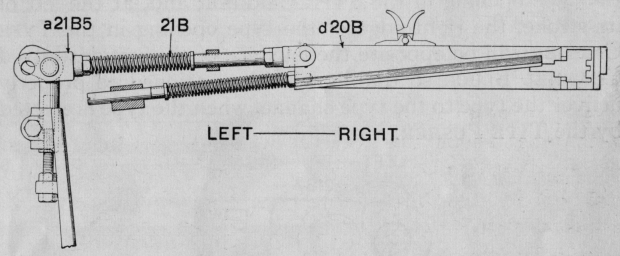

just cast. The type is pushed into the TYPE CARRIER by the MOLD BLADE making a forward motion. The TYPE CARRIER then moves to the left and stops in proper position for the TYPE PUSHER to pass through it, pushing the type from the TYPE CARRIER into the TYPE CHANNEL.

TYPE CARRIER

Three Adjustments

First—length of stroke.
Second—position of stroke.
Third—length and position of stroke (Display Type).

Consider the first and second adjustments together since changing one affects the other.

First and Second

Object: That the TYPE CARRIER d20B, at the right of its stroke, will be positioned to properly receive body size type from the MOLD without having the type strike the edge of the type opening in the TYPE CARRIER; and, at the left of its stroke, the right edge of the type opening in the TYPE CARRIER will be opposite the left face of the standard fixed CHANNEL BLOCK so that it will be positioned to properly deliver the type to the type channel when the type is ejected by the TYPE PUSHER.

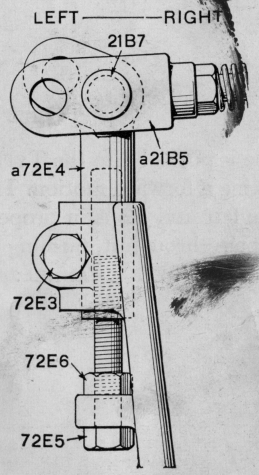

PRELIMINARY

Remove the MOLD. See that the PIN 21B7 is through the right hole of the EYE a21B5 and the right hole of the CAM-LEVER EXTENSION a72E4.

PROCEDURE

Turn the Machine to 220 degrees in which position the TYPE CARRIER will be at the left.

NOTE: The slight additional movement to the left to cut off the jet, is not included in the length of the stroke for this adjustment.

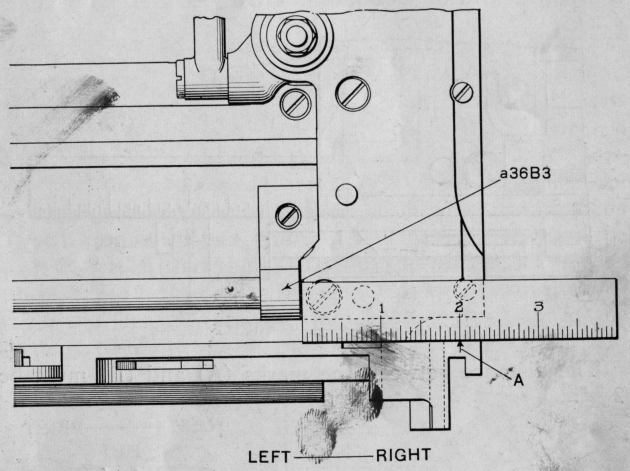

Place the end of a scale against the GUIDE-ROD STAND a36B3 and make a mark on the TYPE CARRIER exactly 2″

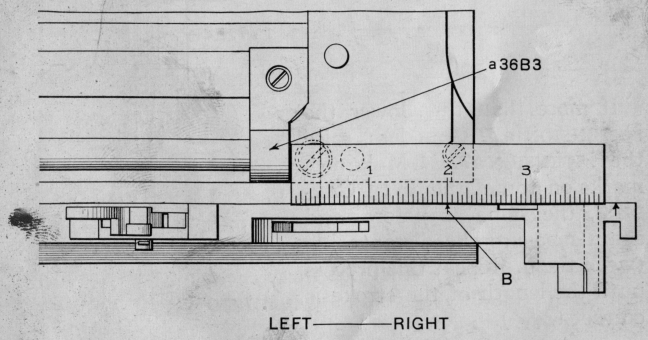

from the STAND a36B3, as at (A). (For convenience in marking, a piece of white paper may be stuck on the top surface of the Type Carrier).

Turn the MACHINE to 65 degrees, in which position the TYPE CARRIER will be at the right, and, holding the scale the same as before, again mark the TYPE CARRIER exactly 2″ from the STAND a36B3, as at (B).

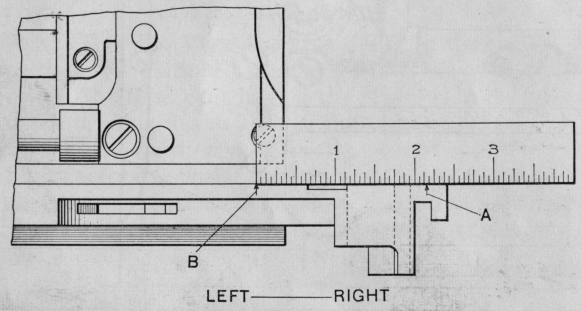

The distance between the marks (A) and (B) must be $2\frac{5}{32}$″.

If more than this, lower the EXTENSION a72E4; if less, raise the EXTENSION a72E4. Make new marks on top of the TYPE CARRIER, the same as before, and again measure the distance between them. Repeat this process until the length of the stroke is correct ($2\frac{5}{32}$″).

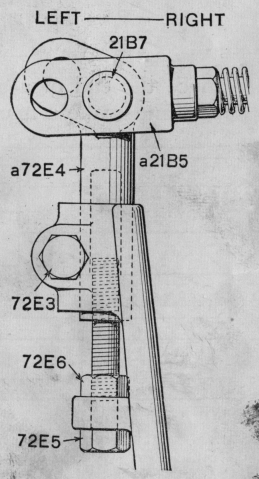

To lower the EXTENSION a72E4 loosen the BOLT 72E3 and NUT 72E6, and screw the BOLT 72E5 into the EXTENSION a72E4, drawing it down, (to raise the EXTENSION a72E4, screw out the BOLT 72E5) then tighten first the NUT 72E6 and then the BOLT 72E3.

See that the EXTENSION a72E4 is not turned so that it binds in the EYE a21B5.

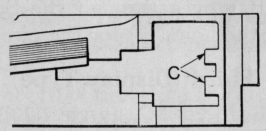

Turn the MACHINE to 65 degrees, in which position the TYPE CARRIER will be at the right, and make the length of the ROD 21B such that the left face of the projections (C), at the right of the opening in the TYPE CARRIER (against which the TYPE CLAMP rests when not holding type) are at the distance of $1\frac{31}{64}$″ from the right face of the "B" PIN BLOCK.

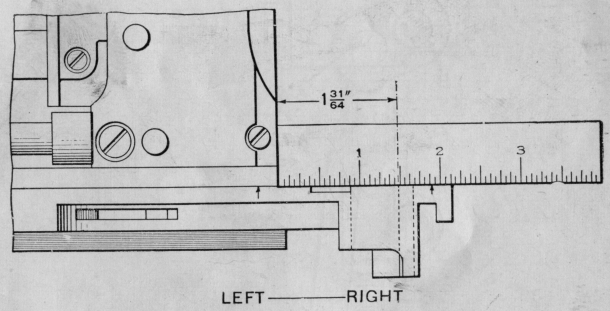

To alter the length of the ROD 21B slack off the NUTS 21B2 and 21B6, and turn the ROD 21B into or out from its EYES 21B1 and a21B5, using a pin wrench in the hole (D) near the right end of the ROD. Tighten the NUTS 21B2 and 21B6 and test to see that the adjustment holds. (The ROD 21B has right and left threads).

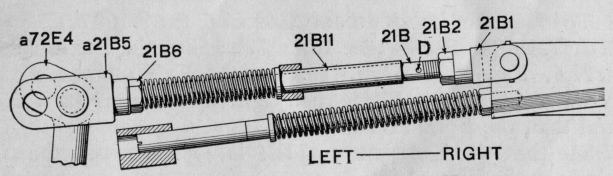

NOTE: When the TYPE CARRIER is moved to its right position the ROD 21B moves through the SLEEVE 21B11 far enough to expose the hole (D) for the pin wrench.

Third (Display Type)

Object: That the TYPE CARRIER d20B will travel far enough to the right to be able to receive the larger type.

PRELIMINARY

Before starting this adjustment see that the TYPE CARRIER is in standard adjustment with the PIN 21B7 in the right hole (A) of the EYE a21B5 and the EXTENSION a72E4 (see adjustment above—First and Second).

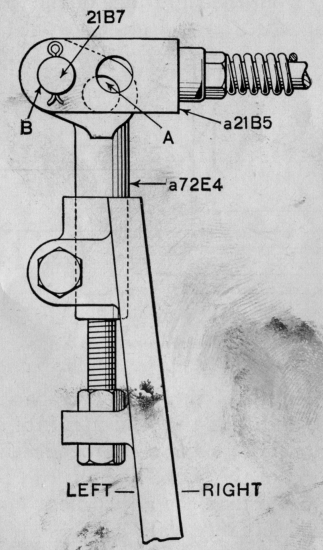

PROCEDURE

Change the PIN 21B7 from the right hole (A) in the EYE a21B5 and the EXTENSION a72E4 to the left hole (B) in these pieces. This correctly increases the length of the stroke to receive the larger type and positions the left end of the stroke of the CARRIER $\frac{1}{8}$″ further to the right than on the standard setting.

Summary: *The travel of the Type Carrier is* $2\frac{5}{32}$″ *(this does not include the slight additional movement to the left, which cuts off the jet).*

At the right of the stroke the left face of the projections (C) is $1\frac{31}{64}$″ *from the right face of the "B" Pin Block.*

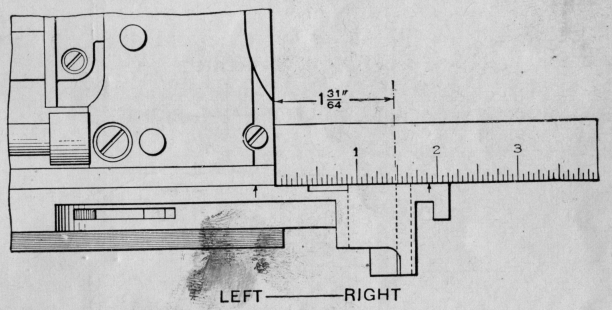

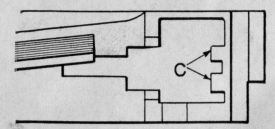

Display Type: *Increase the length of the stroke of the Carrier d20B by changing the Pin 21B7 from the right hole (A) in the Eye 21B5 and the Extension a72E4 to the left hole (B).*

TYPE PUSHER

The TYPE PUSHER pushes the type from the TYPE CARRIER into the type channel and past the LATCHES of the TYPE CHANNEL BLOCKS; the LATCHES then hold the type and prevent it falling back into the TYPE CARRIER.

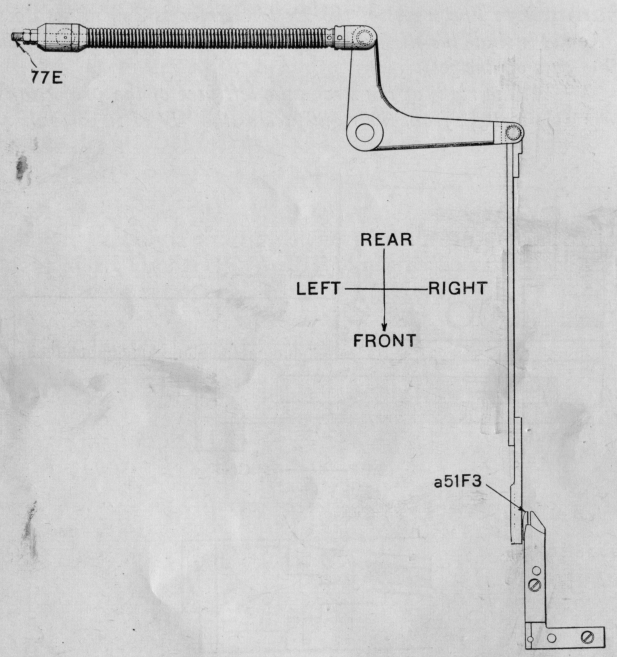

TYPE PUSHER

One adjustment—position of stroke.

Object: To push the type from the TYPE CARRIER and past the retaining catches on the LATCHES of the TYPE CHANNEL BLOCKS, so that the type will not fall back into the TYPE CARRIER, and to withdraw before the TYPE CARRIER starts to move.

PRELIMINARY

Remove WING BOLT a50F6 and the WASHER 50F7, and take off the TYPE CHANNEL BLOCK 50F (adjustable).

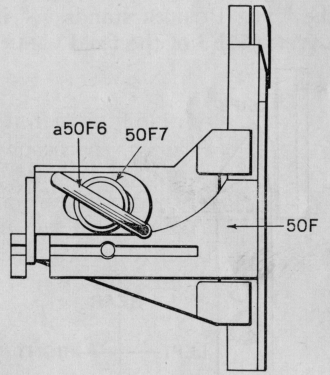

See that the SOCKET 78E is adjusted to fit on its BALL STUD freely but without any looseness. To tighten, loosen the LOCK NUT 78E1 and turn in the PLUG 78E2 using a pin

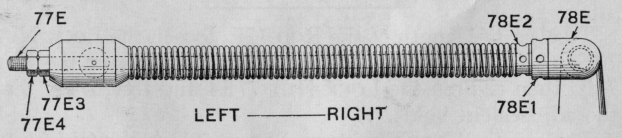

wrench; then tighten the LOCK NUT 78E1, and test to see that the adjustment holds.

Caution: In making this adjustment, hold the upper end of the TYPE-PUSHER-CAM LEVER to the left to take up any

lost motion and to have the TYPE PUSHER under a condition similar to the resistance met with when pushing type out of the TYPE CARRIER.

See that the prongs of the TYPE PUSHER are straight, and that the center prong enters the slots in the LATCHES of the TYPE CHANNEL BLOCKS.

PROCEDURE

Turn the MACHINE to 280 degrees, in which position the TYPE PUSHER is at the end of its forward movement. With the MACHINE in this position alter the position of the TYPE PUSHER, by altering the length of the ROD 77E, until the front end of the TYPE PUSHER stands $\frac{1}{64}$" in front of the catch on the LATCH a51F3 of the fixed CHANNEL BLOCK.

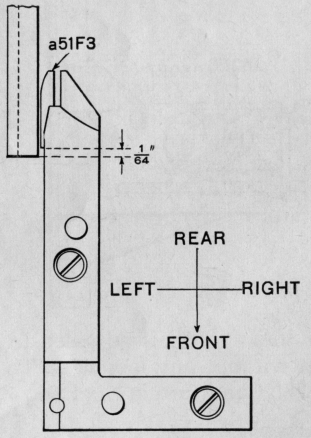

To alter the length of the ROD 77E, loosen the LOCK NUT 77E4 and turn the NUT 77E3 further on or off from the ROD 77E; then tighten the LOCK NUT 77E4 and test to see that the adjustment holds.

Replace the TYPE CHANNEL BLOCK 50F (adjustable) and fasten it with its WASHER 50F7 and WING BOLT a50F6.

Summary: *The front end of the Type Pusher at its extreme forward position stands $\frac{1}{64}$" in front of the catches on the Latches of the Channel Blocks.*

NORMAL-WEDGE LOCKING PIN

The NORMAL-WEDGE LOCKING PIN accurately positions and locks in position the NORMAL WEDGE at all times except when raised by hand by its HANDLE. It is necessary to raise the LOCKING PIN by hand to permit the NORMAL WEDGE to be moved.

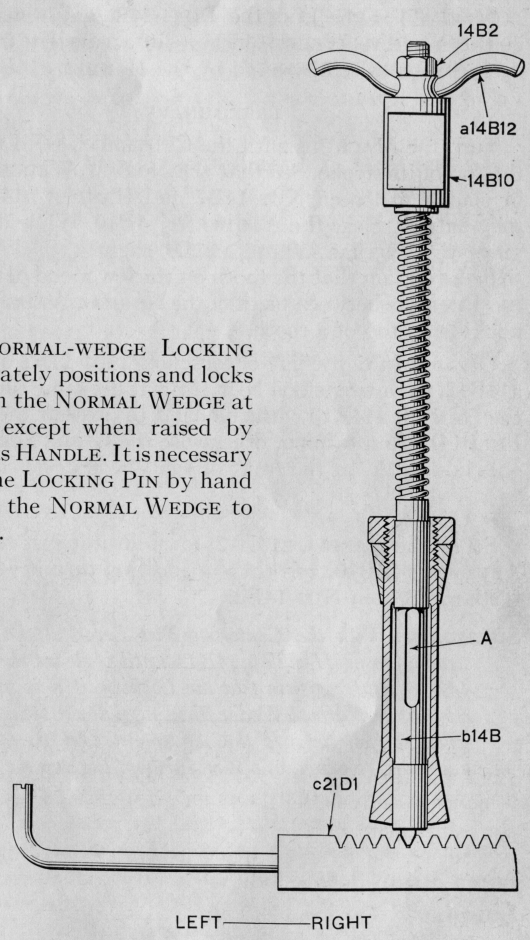

NORMAL-WEDGE LOCKING PIN

One Adjustment—position.

Object: That the LOCKING PIN b14B may remain seated in the NORMAL WEDGE, locking it accurately in position except when raised by hand by the HANDLE a14B12.

PRELIMINARY

Turn the MACHINE until the CENTERING-PIN LEVER is at the top of its stroke. See that the NORMAL WEDGE c21D1 is in place and loosen NUT 14B2 and HANDLE a14B12 until they entirely clear the ABUTMENT 14B10. While doing this, move the NORMAL WEDGE c21D1 slightly, back and forth to make certain that the tooth on the lower end of the LOCKING PIN seats between teeth of the NORMAL WEDGE and does not ride on top of a tooth.

Caution: In tightening or loosening NUT 14B2 or HANDLE a14B12, use a wrench on NUT 14B2 at the same time holding the HANDLE a14B12 with the hand to prevent the LOCKING PIN b14B from turning, other-wise the GUIDE SCREW which goes in slot "A" at the front of the PIN may be sheared off.

PROCEDURE

Screw the HANDLE a14B12 down until it just touches the ABUTMENT 14B10, and then in addition turn it ¾ of a turn further. Tighten NUT 14B2.

Summary: *With the Centering-Pin Lever at the top of its stroke, loosen Handle a14B12 until it clears the Abutment 14B10, making sure that the Locking Pin is seated properly in the Normal Wedge, then turn down Handle a14B12 until it just touches the Abutment 14B10, and then in addition, give it ¾ of a turn further. Tighten the Nut 14B2.*

MOLD-BLADE OPERATING ROD

The MOLD-BLADE OPERATING ROD moves the MOLD BLADE to the front and rear and holds it firmly at each end of its stroke. On its forward stroke the MOLD BLADE pushes the type from the MOLD into the TYPE CARRIER, and on its stroke to the rear it properly sizes the opening in the MOLD for the next character to be cast.

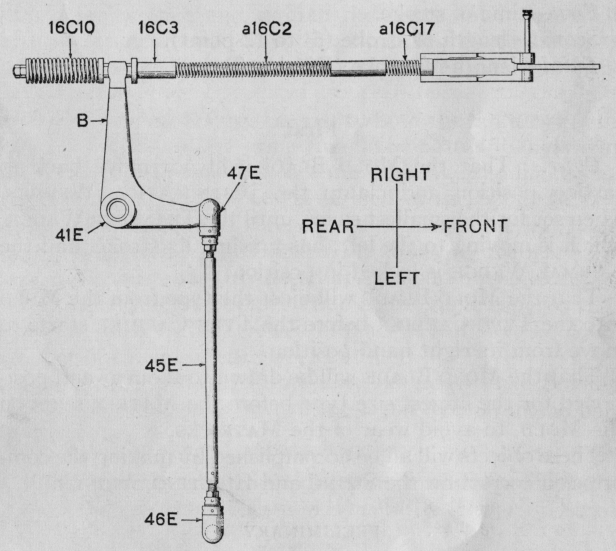

The MOLD-BLADE OPERATING ROD is moved by a BELL CRANK which is oscillated about its STUD by means of a ROD connected to the MOLD-BLADE CAM LEVER.

The BELL CRANK on its forward stroke moves the OPERATING ROD until the MOLD BLADE strikes its stop. A continued movement of the BELL CRANK compresses the two EJECTING SPRINGS, thus ensuring that the MOLD BLADE has moved to its forward position and is being held there firmly.

On the back stroke of the BELL CRANK the OPERATING ROD moves to the rear until the MOLD BLADE is stopped by the WEDGES and ABUTMENT. A continued movement of the BELL CRANK to the rear compresses the SIZING SPRING, ensuring that the MOLD BLADE will be firmly held at the end of its sizing stroke.

MOLD-BLADE OPERATING ROD

Three Adjustments

First—time of stroke.
Second—length of stroke (5- to 12-point).
Third—length of stroke (Display Type).

First

Objects: That the MOLD BLADE will not move back to casting position and clamp the JUSTIFICATION WEDGES, when set for the smallest space, until the TRANSFER WEDGE, which is moving to the left, has finished its stroke, and the NORMAL WEDGE is locked in position.

That the MOLD BLADE will eject the type from the MOLD into the TYPE CARRIER before the TYPE CARRIER starts to move from its right hand position.

That the MOLD BLADE will be drawn to the rear and positioned for the largest size type before the MATRIX seats on the MOLD, to avoid wear of the MATRICES.

These objects will all be accomplished by making the compression correct on the SIZING and EJECTING SPRINGS.

PRELIMINARY

For this adjustment any mold can be on the machine. The PACKING PIECE 32C1 must be in position (see page 68) and the wedges positioned to cast 12½ set .1729 (see WEDGE POSITION CHART on Page 84.

SOCKETS 46E and 47E must be adjusted to fit on their BALL STUDS so that they move freely but without any looseness. To adjust these SOCKETS, loosen the NUTS 45E1 and 45E2, noting that one has a right hand thread and the other a left hand thread. Remove the ROD 45E, turning it by means of

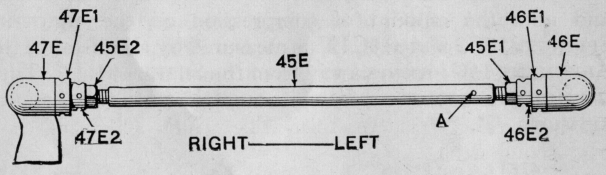

a pin wrench inserted in the hole (A) provided for that purpose. Loosen the Nuts 46E1 and 47E1, and turn the PLUGS 46E2 and 47E2 in the SOCKETS 46E and 47E until they come to bearing on their respective BALL STUDS. Hold the PLUGS with a pin wrench and tighten the NUTS 46E1 and 47E1 with a spanner wrench. Test this adjustment, with the NUTS tight, to make sure that the SOCKETS move freely but without looseness.

Enter the ROD 45E in the ends of both the SOCKET PLUGS 46E2 and 47E2 at the same time. The ROD 45E has right and left hand threads and care must be taken to make sure that the right hand thread is entered in the SOCKET PLUG having the right hand thread, and similarly the left hand thread is entered in the SOCKET PLUG having the left hand thread. Be sure that the thread at each end of the ROD 45E enters its respective SOCKET PLUG at the same time, so that when the ROD 45E is screwed in place it will have an equal amount of thread in each SOCKET PLUG.

When the ROD 45E is properly entered in the SOCKET PLUGS, give it several turns using a pin wrench in the hole (A) provided.

PROCEDURE

Turn the MACHINE to 92 degrees, in which position the arm (B) of the BELL CRANK 41E is in its forward position

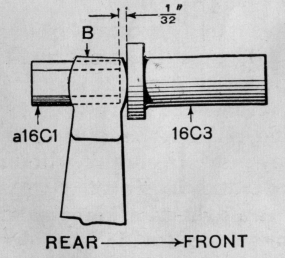

and note the amount of compression on the EJECTING SPRINGS a16C2 and a16C17, as measured by the distance the ABUTMENT 16C3 moves away from the SLEEVE a16C1. Turn the ROD 45E into, or out from, its SOCKETS until this distance measures $\frac{1}{32}''$.

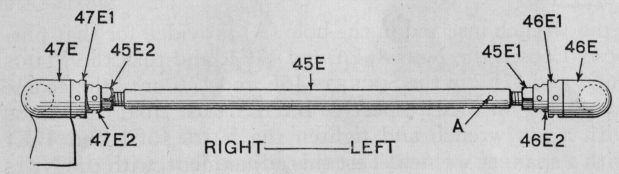

When measuring this, take hold of the SIZING SPRING 16C10 and pull to the rear to take up the lost motion.

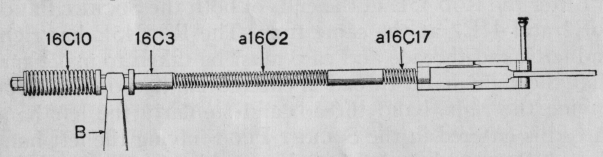

Tighten the NUTS 45E1 and 45E2 and turn the MACHINE to the 92 degree position again, to make sure that the adjustment holds, that is, that there is $\frac{1}{32}''$ compression with all NUTS tight.

Next turn the MACHINE until the arm (B) of the BELL CRANK 41E is in its rear position, and note the compression on the SIZING SPRING 16C10 as measured by the distance the ABUTMENT 16C13 moves away from the SLEEVE a16C1.

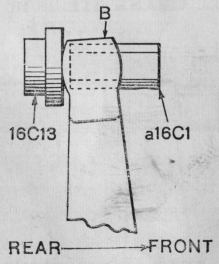

Alter the length of ROD 45E until the two measurements are approximately equal; that is, the compression on the SIZING and EJECTING SPRINGS. Note, however, that the compression on the EJECTING SPRINGS a16C2 and a16C17 at end of forward stroke, should be about $\frac{1}{32}''$.

To alter the length of the ROD 45E loosen the LOCK NUTS 45E1 and 45E2 and turn the ROD 45E into, or out from its end CONNECTIONS 46E2 and 47E2, using a pin wrench in the hole (A) provided. Note that the ROD 45E has right and left thread. Tighten the LOCK NUTS 45E1 and 45E2.

Second

Object: To make the movement of the MOLD BLADE suitable for casting type 12½ set and smaller.

When casting type .1729 (12½-set) or under, the standard setting of the LEVER b44E7 is with the COLLAR b44E9 between the upper end of the LEVER b44E7and the LEVER a44E6, held in place by the SCREW a44E8.

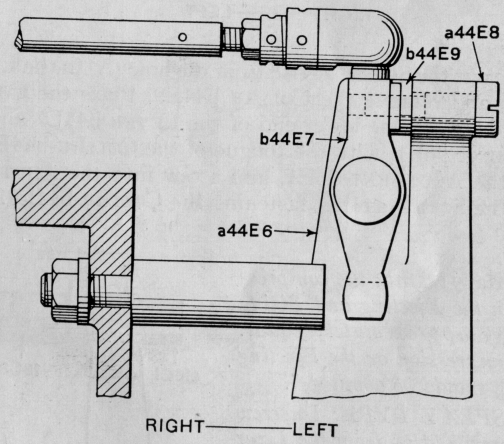

Third

Object: To allow the MOLD BLADE to draw back far enough to permit type 36-points wide to be cast.

PROCEDURE

Caution: Do not drop the COLLAR b44E9.

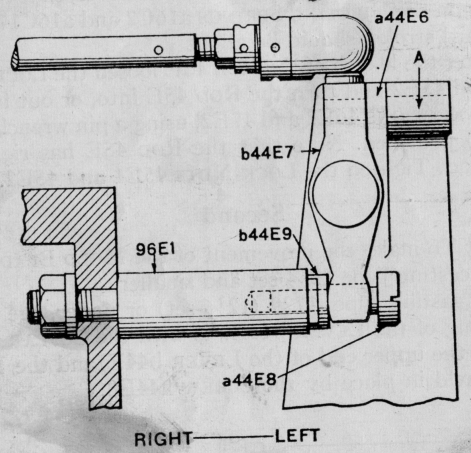

Take out the SCREW a44E8 from the hole (A) in the LEVER a44E6, and remove the COLLAR b44E9. Place the COLLAR b44E9 between the lower end of the LEVER b44E7 and the ABUTMENT 96E1, with the tongue of the COLLAR b44E9 toward the ABUTMENT 96E1, and screw into the ABUTMENT 96E1 the SCREW a44E8, fastening the COLLAR b44E9.

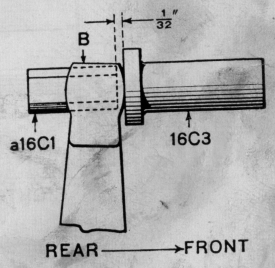

Summary: *Make the compression on the Ejecting and Sizing Springs approximately equal. The compression on the Ejecting Spring should be about* $\frac{1}{32}$*".*

DISPLAY TYPE: Unscrew the Screw a44E8 from the Lever a44E6, and screw it into the Abutment 96E1, placing the Collar b44E9, with the tongue extending toward the Abutment, between the Lever b44E7 and the Abutment 96E1.

BRIDGE

The BRIDGE carries the MATRIX HOLDER over the MOLD, it lowers and raises the MATRIX to and from the MOLD, and it centers the MATRIX accurately over the MOLD opening, holding it firmly in position.

The CARRYING FRAME lowers the MATRIX HOLDER to a point where the MATRIX may rest on the MOLD free from any pressure from the CARRYING FRAME.

The DRAW RODS approximately position the MATRIX over the MOLD opening and the CENTERING PIN accurately positions it. The CENTERING PIN enters the hole in the MATRIX HOLDER and brings the MATRIX to position just before the MATRIX seats on the MOLD so that the MATRIX is not dragged across the face of the MOLD. Pressure is then exerted through the CENTERING PIN to hold the MATRIX in position.

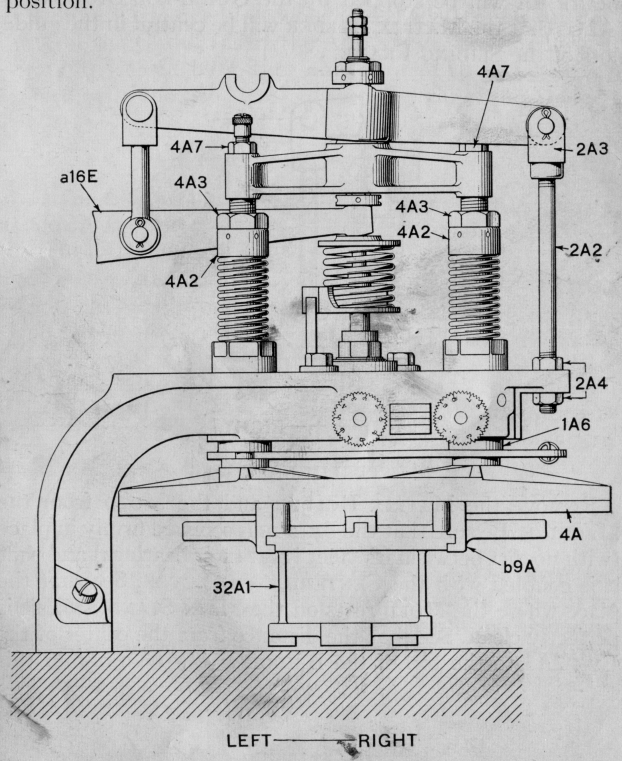

BRIDGE

Four Adjustments

First—CARRYING FRAME.

Second—relation of the CENTERING PIN to the MATRIX.

Third—position of CENTERING PIN at bottom of its stroke.

Fourth—increased pressure on the CENTERING PIN.

First

Object: To insure that when the CENTERING-PIN LEVER a16E is at the bottom of its stroke, with the CENTERING PIN holding the MATRIX tight on the MOLD, the CARRYING FRAME 4A will be stopped by the GUIDE-ROD STOP NUTS 4A2 so that the MATRIX HOLDER will be central in the guide slots of the SLIDING FRAME.

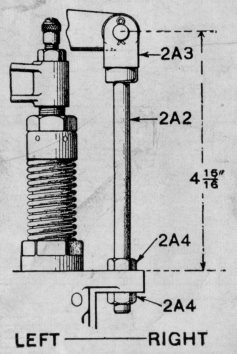

PRELIMINARY

Remove the MATRIX HOLDER and the MOLD from the MACHINE. Be sure that the BRIDGE is screwed firmly in place (with no dirt between its "feet" and their bearings) and that it is coupled with the CENTERING-PIN LEVER. See that the place where the MOLD rests on the MAIN STAND a36E41 is perfectly clean. See that the distance from the center of the EYE 2A3 to the top of the BRIDGE is $4\frac{15}{16}$″. To obtain this

length loosen the LOCK NUT 2A4 (lower) and turn the upper NUT 2A4 up or down on the ROD 2A2, thus lengthening or shortening the ROD 2A2; then tighten the lower NUT 2A4.

Slack off the LOCK NUT 4A10 and the ADJUSTING NUT 4A9.

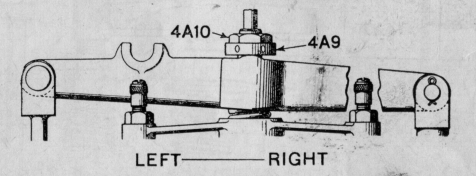

Turn the MACHINE to zero, in which position the CENTERING-PIN LEVER is at the top of its stroke, and the TYPE CARRIER has moved far enough to the left to be out of the way of the GAGE. Insert the ADJUSTING GAGE 32A1 in the SLIDING FRAME b9A, the same as a MATRIX CASE is inserted, with the two "feet" toward the rear of the MACHINE.

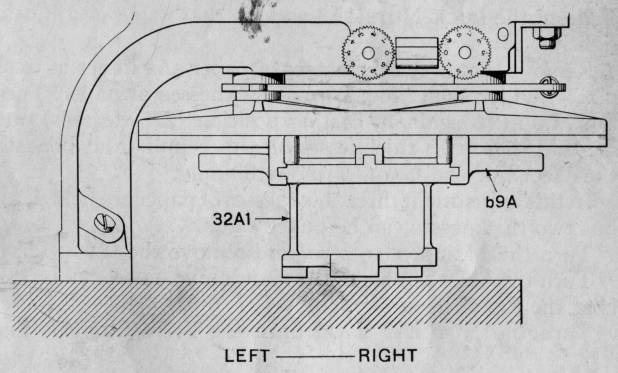

Push the GAGE back as far as it will go.

Place three thicknesses of Controller Paper or three thicknesses of 16 lb. bond paper (approx. .0085″) beneath each "foot" of the GAGE and turn the MACHINE to casting position (220 degrees).

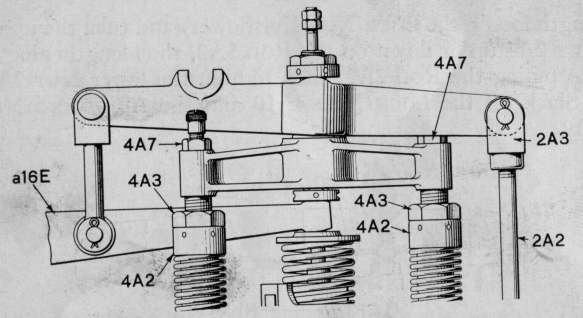

Slack off the two LOCK NUTS 4A3 and the two STOP NUTS 4A2. Be sure that the two NUTS 4A7 are tight.

PROCEDURE

Caution: Do not move one NUT 4A2 very much without moving the other one correspondingly.

Screw down the NUTS 4A2 until the three thicknesses of paper are just held tightly under the "feet" of the GAGE. Tighten the LOCK NUTS 4A3 and see that paper is still held tightly.

Remove the three thicknesses of paper and insert in their places, under each "foot", two thicknesses of paper. Turn the MACHINE again to casting position (220 degrees) and see that these two thicknesses of paper pull from beneath the "feet" of the GAGE without binding.

In this adjustment three thicknesses of paper are held tight, but two thicknesses can be pulled out.

Turn the MACHINE to zero, and remove the GAGE 32A1.

Turn the MACHINE until the CENTERING-PIN LEVER a16E is at the top of its stroke.

Turn the NUT 4A9 down until the Fibre Stop 7A just

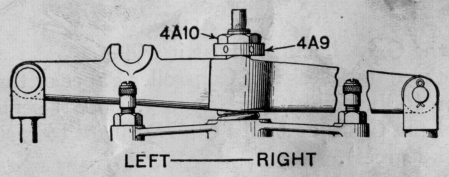

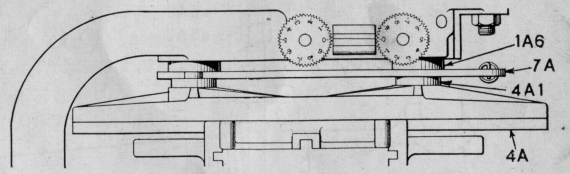

moves freely between the GUIDE RODS 4A1 and the BRIDGE BUSHINGS 1A6.

Tighten LOCK NUT 4A10 and see that the adjustment holds.

These adjustments are correct for all style MOLDS and MATRICES.

DISPLAY MATRICES are 7-points thick (our present standard), but a few of the early ELECTRO DISPLAY MATRICES were made 6-points thick. The GAGE setting is correct for the MATRICES 7 points thick. To provide for the MATRICES which are 6 points thick, a 1-point liner is furnished with each font containing any of these MATRICES. This liner is to be placed between the MATRIX HOLDER and each MATRIX that is 6 points thick. It must never be used under MATRICES which are 7-points thick.

Second

Object: That the CENTERING PIN will seat squarely in the cone hole of the MATRIX just before the MATRIX seats on the MOLD.

PRELIMINARY

Put the MOLD on the MACHINE and insert the MATRIX HOLDER, with a MATRIX in the HOLDER. Place one thickness of paper between the MOLD and the MATRIX, and turn the MACHINE until this paper can just be pulled from between the MOLD and the MATRIX. Loosen the EXTENSION a5A6, using a wrench on the hexagon end next to 5A1 and a spanner wrench on 5A1.

PROCEDURE

Turn the NUT 5A1 up, or down (using a pin wrench) until there is $\frac{1}{64}$" clearance between it and the CENTERING-PIN

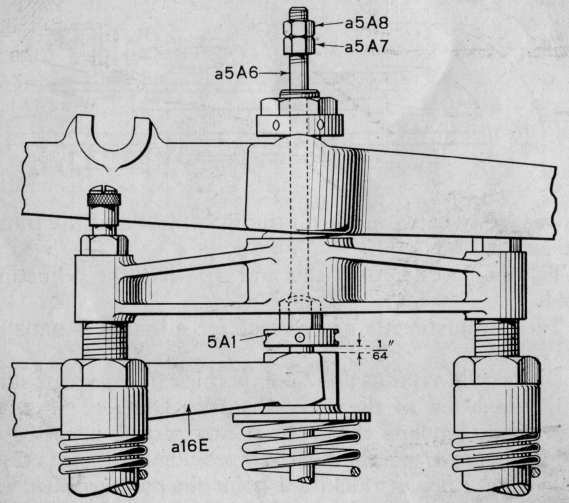

LEVER a16E; then tighten the EXTENSION a5A6, and see that the adjustment holds.

Third

Object: That the CENTERING PIN may not go down too far so as to strike against and injure the MOLD BLADE when the MATRIX HOLDER is out of the MACHINE.

PRELIMINARY

Remove the MATRIX HOLDER. Loosen the NUTS a5A7 and a5A8 and screw down NUT 5A7 a few turns to prevent the CENTERING PIN striking the MOLD when the MACHINE is turned. Then turn the MACHINE to casting position (220 degrees).

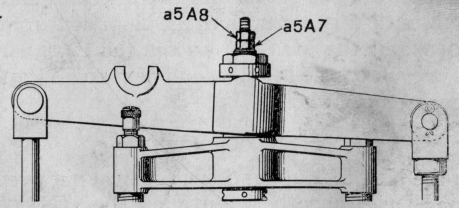

PROCEDURE

Turn the NUT a5A7 up or down until there is 2 points clearance between the top of the MOLD and the point of the CENTERING PIN. Tighten the NUT a5A8 and see that the adjustment holds.

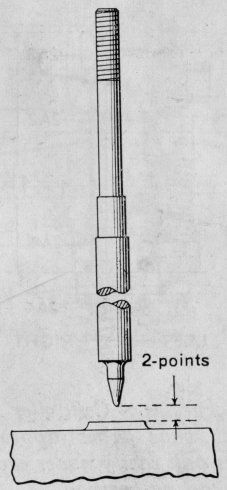

Fourth

Object: To hold the MATRIX on the MOLD.

When casting sorts 14 points or larger the spring pressure on the CENTERING PIN must be increased. Place the AUXILIARY SPRING Xa36A between the ABUTMENTS.

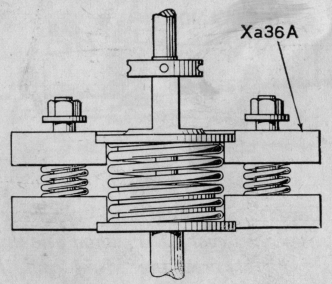

Summary: *Make the distance from the center of the Bridge-lever-fulcrum-rod Forked Eye 2A3 to the top of the Bridge $4\frac{15}{16}$". Using the Carrying-frame Adjusting Gage 32A1*

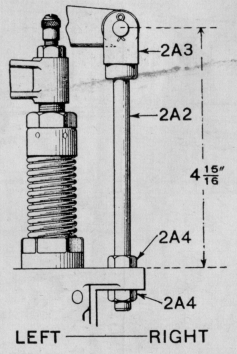

make three thicknesses of Controller Paper or three thicknessess of 16 lb. bond paper (approx. .0085") tight and two thicknesses pull easily under each foot of it when the Machine is in casting position.

With the Centering-pin Lever at the top of its stroke adjust Nut 4A9 to permit the Fibre Stop 7A to just be moved freely in and out.

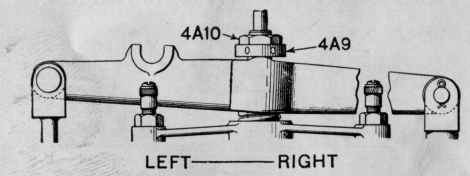

Adjust the Nut 5A1 to give $\frac{1}{64}$" clearance between it and the Centering-pin Lever a16E when one thickness of paper just pulls from between the Mold and the Matrix.

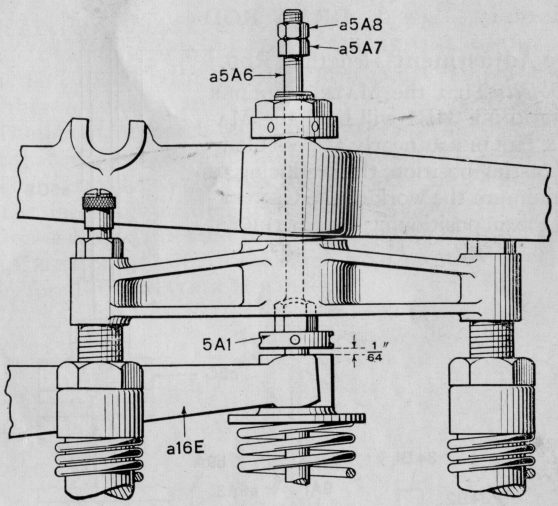

Adjust the Nut a5A7 so that when the Machine is in casting position there will be 2 points clearance between the Mold and the Centering Pin when the Matrix Holder is out.

Put on the Auxiliary Spring Xa36A to increase the pressure on the Centering Pin when casting type 14-point and larger.

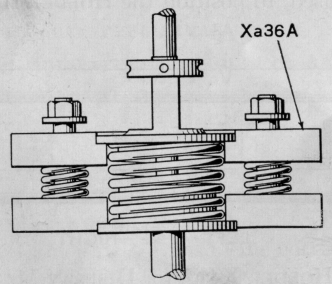

DRAW ROD

One Adjustment—length of ROD.

Object: That the MATRIX-HOLDER POSITIONER 34B1 will hold the MATRIX HOLDER as nearly as possible to the casting position, thus reducing to a minimum the work of the CENTERING PIN in positioning the MATRICES.

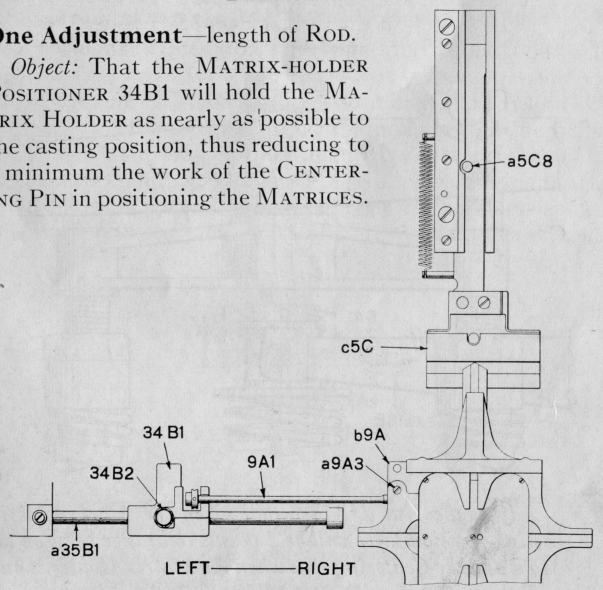

If MATRIX HOLDER X40A for casting from CELLULAR MATRICES is used, the right hand notch in ROD a35B1 or in ROD 35B1 is used, to position the HOLDER right and left.

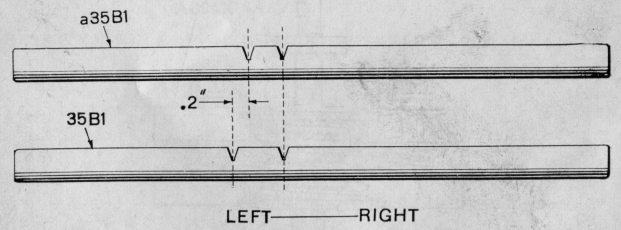

If MATRIX HOLDER X41A for DISPLAY MATRICES is used, the left hand notch in the GUIDE ROD a35B1 is used to position the HOLDER right and left (ROD 35B1 cannot be used for this HOLDER).

If MATRIX HOLDER X39A for DISPLAY MATRICES is used, the left hand notch in the GUIDE ROD 35B1 is used to position the HOLDER right and left. (ROD a35B1 cannot be used for this HOLDER).

The left hand notch on ROD a35B1 is .2″ further to the left than the left hand notch on the ROD 35B1.

There is no DRAW ROD on the "C" side. Instead, there is placed in a hole in the AIR-PIN BLOCK, and through the CROSS-SLIDE EXTENSION, the POSITIONER a5C8, which holds the CROSS SLIDE c5C in the same fixed position front and rear, for all the MATRIX HOLDERS.

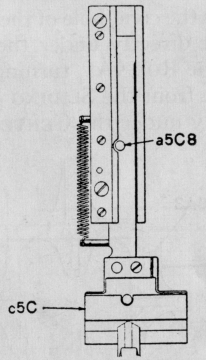

PRELIMINARY

See that the MOLD is on the MACHINE, and the MATRIX HOLDER in place.

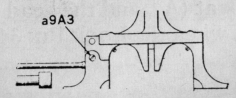

Loosen the SCREW a9A3.

See that the LOCK PIN 34B2 is in the correct notch in the ROD a35B1.

Cautions: Do not let the CENTERING PIN seat in the cone-hole of the MATRIX HOLDER until the DRAW ROD is approximately adjusted; otherwise the CENTERING PIN may become

bent. In the early form of MATRIX HOLDER for DISPLAY MATRICES the cone-hole is in the top of the MATRIX HOLDER. In the later MATRIX HOLDER for DISPLAY MATRICES there is a hole through the top of the MATRIX HOLDER and the cone-hole is in the MATRIX-HOLDER SLIDE. In making the final adjustment of the DRAW ROD there should be a MATRIX in the MATRIX HOLDER. In the MATRIX HOLDER for single CELLULAR MATRICES the cone-hole is in the MATRIX and a MATRIX must be in the MATRIX HOLDER.

PROCEDURE

Turn the MACHINE slowly until the lower end of the CENTERING PIN approaches the cone-hole of the MATRIX HOLDER. If the cone-hole is not directly under the CENTERING PIN change the length of the ROD 9A1, turning it by means of a pin wrench into or out from the SLIDING FRAME b9A, until the cone-hole is directly under the CENTERING PIN.

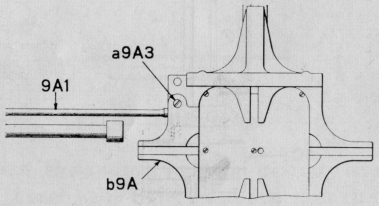

Continue to turn the MACHINE until the CENTERING PIN seats in the cone-hole.

Turn the ROD 9A1 into or out from the SLIDING FRAME b9A to obtain equal clearances between the end of the ROD and the POSITIONER at (A), and the head of the ROD and the POSITIONER at (B), when the LOCK PIN 34B2 is in the correct

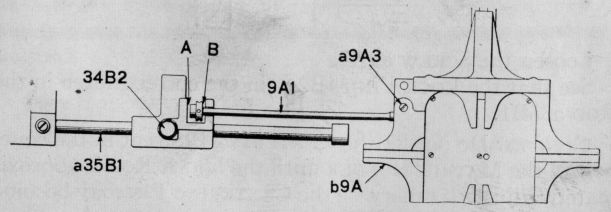

notch in the ROD a35B1, or 35B1, depending upon the MATRIX HOLDER being used.

Test for this equal clearance with pieces of Controller Paper or 16 lb. bond paper.

Tighten the SCREW a93A, and see that the adjustment holds.

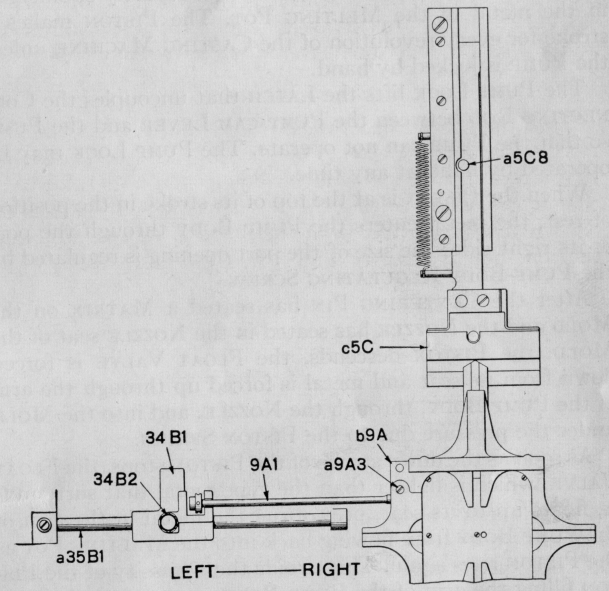

Summary: *To center the Matrix Holders use the Positioner 34B1 to position them right and left, being careful to use the correct Guide Rod, and the correct notch, for each Matrix Holder; and adjust the Draw Rod 9A1 to give equal clearance each side in Positioner 34B1. Use Positioner a5C8 to position Matrix Holders front and rear.*

PUMP

The PUMP forces the metal into the MOLD to form the type. It consists, essentially, of the PUMP BODY and PISTON (working in the PUMP BODY), which are partly submerged in the metal in the MELTING POT. The PISTON makes a stroke for every revolution of the CASTING MACHINE unless the PUMP is locked by hand.

The PUMP LOCK lifts the LATCH that uncouples the CONNECTING ROD between the PUMP-CAM LEVER and the PUMP so that the PUMP can not operate. The PUMP LOCK may be operated by hand at any time.

When the PISTON is at the top of its stroke in the position of rest, the metal enters the PUMP BODY through the port in its right side; the size of the port opening is regulated by the PUMP-BODY REGULATING SCREW.

After the CENTERING PIN has seated a MATRIX on the MOLD and the NOZZLE has seated in the NOZZLE seat of the MOLD, the PISTON descends, the FLOAT VALVE is forced down from its seat and metal is forced up through the arm of the PUMP BODY, through the NOZZLE, and into the MOLD under the pressure due to the PISTON SPRING.

As soon as the down stroke of the PISTON stops, the FLOAT VALVE, which is lighter than the type metal that surrounds it, floats up to its seat, preventing the metal in the arm of the PUMP BODY from flowing back into the MELTING POT as the PISTON rises again. This avoids the necessity of the PISTON filling the arm of the PUMP BODY on every stroke.

It is desirable that enough metal should flow back from the arm of the PUMP BODY to empty the NOZZLE, thus avoiding the possibility of the metal chilling and clogging the NOZZLE. The FLOAT VALVE is, therefore, provided with a small hole in its bottom. which allows enough metal to flow back through it to lower the level of the metal in the arm of the PUMP BODY below the NOZZLE.

PUMP-CAM-LEVER CONNECTING ROD

One Adjustment—length of ROD.

Object: That the LATCH 33H1, may be able, after it has released the LEVER 34H, to re-engage it again as soon as the COLLAR 49D1 is moved from contact with the LATCH 33H1.

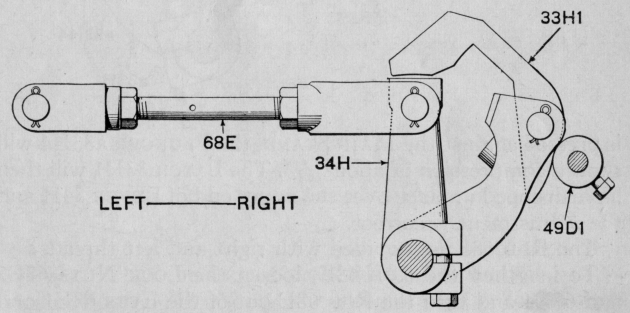

PRELIMINARY

Release the PUMP TRIP, thereby moving the COLLAR 49D1 to the rear and away from the LATCH 33H1, leaving the LATCH 33H1 free to drop over LEVER 34H to bring the PUMP into action.

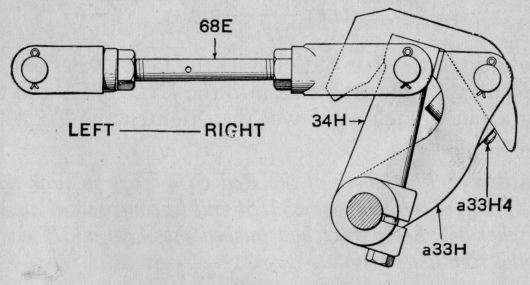

PROCEDURE

Adjust the length of the ROD 68E so that, when the MACHINE is turned until the LEVER 34H has pushed the ARM a33H as far to the right as possible, and the PLUNGER a33H4

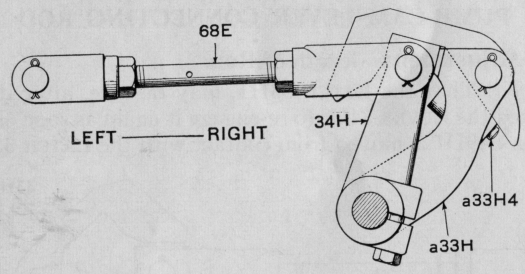

is pressed against the MAIN STAND, the PLUNGER a33H4 will show a compression of about $\frac{1}{64}$". The LATCH 33H1 will then have dropped in place over the upper end of LEVER 34H and the Adjustment is correct.

The ROD 68E is provided with right and left threads.

To lengthen the ROD 68E, loosen the LOCK NUTS 68E2 and 68E4 and turn the ROD 68E out of the EYES 68E1 and 68E3, using a pin wrench inserted in the hole (A) near the center of the ROD; then tighten the LOCK NUTS 68E2 and 68E4.

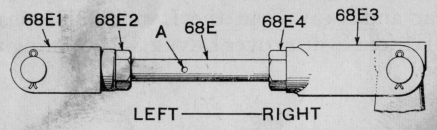

To shorten the ROD 68E, loosen the LOCK NUTS 68E2 and 68E4 and turn the ROD 68E into the EYES 68E1 and 68E3, using a pin wrench as above; then tighten the LOCK NUTS 68E2 and 68E4.

Summary: *The length of the Rod 68E must be such that the spring of the Plunger a33H4 will be compressed about $\frac{1}{64}$" when the Lever 34H has pushed the Arm a33H as far to the right as possible.*

PUMP-BELL-CRANK CONNECTING ROD

One Adjustment—length of ROD.

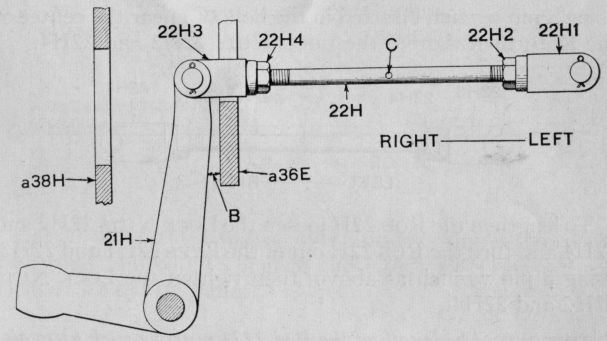

Object: That the BELL CRANK 21H may clear the SWING-FRAME POST a38H when at the end of its stroke to the right, and clear the MAIN STAND a36E41 when at the end of its stroke to the left, by equal distances.

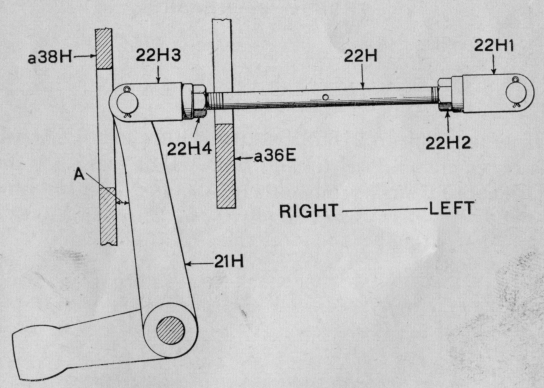

PROCEDURE

Adjust the length of the ROD 22H to give equal clearances at A and B, that is, at each end of the stroke of the BELL CRANK as described above.

The ROD 22H has right and left threads.

To shorten the ROD 22H loosen the LOCK NUTS 22H2 and 22H4 and turn the ROD 22H into the EYES 22H1 and 22H3, using a pin wrench inserted in the hole (C) near the center of the ROD; then tighten the LOCK NUTS 22H2 and 22H4.

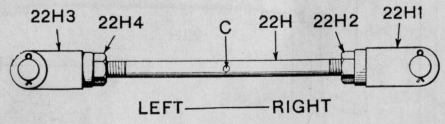

To lengthen the ROD 22H loosen the LOCK NUTS 22H2 and 22H4 and turn the ROD 22H out of the EYES 22H1 and 22H3, using a pin wrench as above; then tighten the LOCK NUTS 22H2 and 22H4.

Summary: *The length of the Rod 22H must be such as to give equal clearance for the upper arm of the Bell Crank 21H at each end of its stroke.*

PUMP-TRIP-TUBE COLLAR

One Adjustment—position of COLLAR.

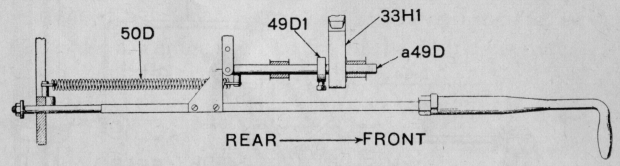

Object: That the COLLAR 49D1 may be moved forward the proper amount to engage the LATCH 33H1, when the PUMP is locked by hand.

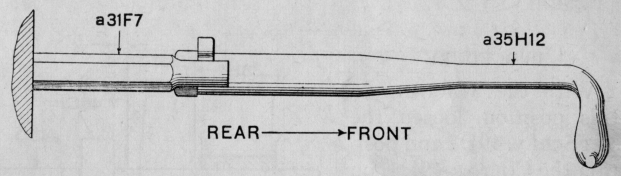

PRELIMINARY

Turn the PUMP-TRIP HANDLE a35H12 to the left, releasing it from the STUD a31F7, and push it back as far as possible to insure that the SPRING 50D has moved the TUBE a49D all the way to the rear.

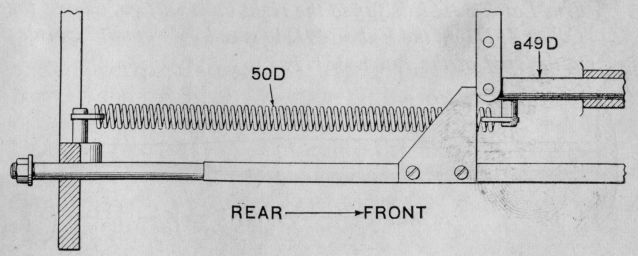

Turn the MACHINE until the LATCH 33H1 is as far to the right as it will go (about 150 degrees position).

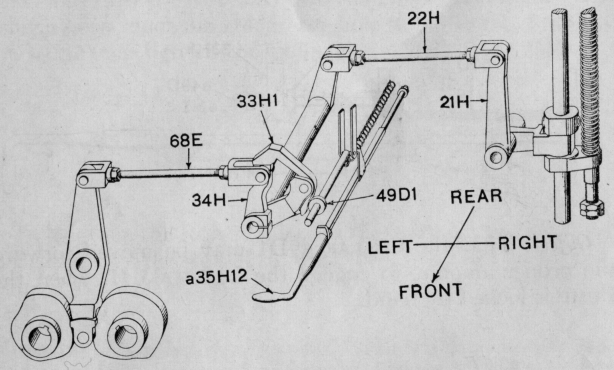

PROCEDURE

With the MACHINE in this position, loosen the SET SCREW 49D2 and position the COLLAR 49D1, on the TUBE a49D, $\frac{1}{32}$" (about 2 points) to the rear of the LATCH 33H1. Tighten the SET SCREW 49D2 and see that the adjustment holds.

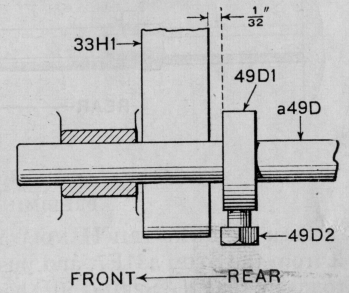

Summary: *With the Pump-trip-Handle a35H12 released and pushed to the rear as far as possible, and the Pump-rocker-arm Latch 33H1 as far to the right as it will go, adjust the Collar 49D1 on the Tube a49D to stand $\frac{1}{32}$" (about 2 points) to the rear of the Latch 33H1.*

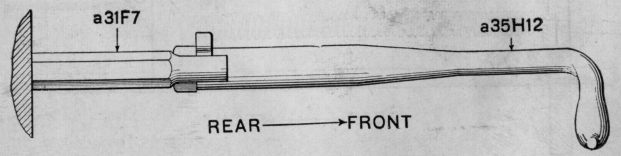

NOZZLE

Two Adjustments

First—to insure that the axis of the NOZZLE is in a vertical position.

Second—to center the NOZZLE in the MOLD opening.

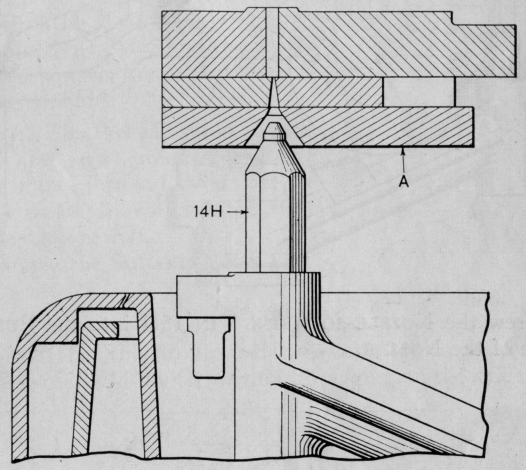

First

Object: That the axis of the NOZZLE 14H when entered in the MOLD opening will be perpendicular to the MOLD (A), and coincide with the axis of the conical opening in the MOLD so that there will be a tight joint between the MOLD and the NOZZLE.

PRELIMINARY

Remove the BRIDGE, the MOLD, the PUMP PISTON, the NOZZLE and the TYPE CARRIER. (If the TYPE CARRIER is not removed and the MACHINE should be turned, the TYPE CARRIER will strike the SQUARING PIN and cause (damage). Raise the MELTING POT into position and, with the PUMP TRIP released, turn the MACHINE to 220 degrees, bringing the PUMP up into casting position.

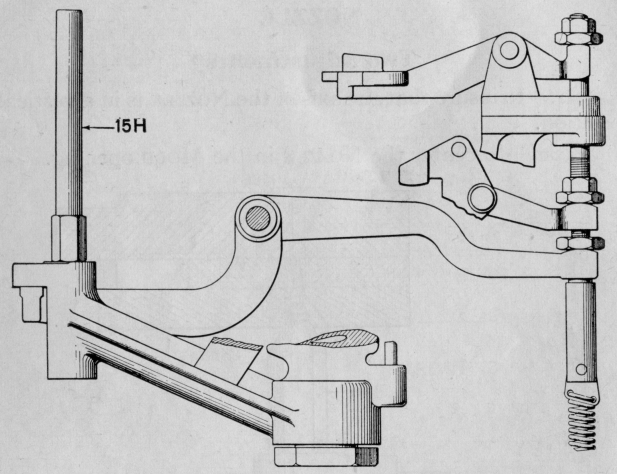

Screw the NOZZLE-SQUARING PIN 15H into the PUMP in place of the NOZZLE.

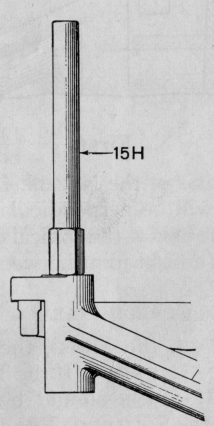

Caution: See that the PIN 15H is screwed squarely on the PUMP and turned down until its shoulder is seated.

PROCEDURE

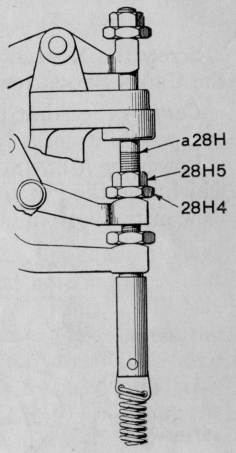

Loosen the NUT 28H5 and move the NUT 28H4 up or down on the ROD a28H until the SQUARING PIN 15H is square with the top of the MAIN STAND. Test this to right and left with a square resting on the top surface of the MAIN STAND. Tighten the LOCK NUT 28H5 and test again with the square, to see that the adjustment holds.

NOTE: The PIN will stand square, front and rear, unless the PUMP BODY or its LIFTING LEVER 25H are badly worn, in which case they should be renewed.

Remove the SQUARING PIN 15H.

Second

Object: That the NOZZLE 14H will enter the conical hole in the base of the MOLD (A) without dragging on the side of the cone.

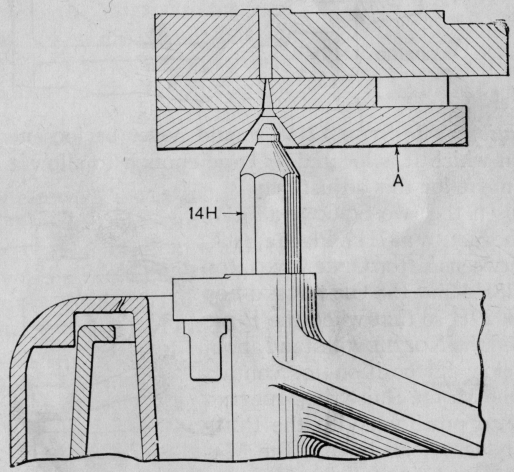

PRELIMINARY

Screw the NOZZLE 14H in place. Replace the MOLD with the CROSS BLOCK removed.

Caution: See that the PUMP PISTON is removed to avoid any possibility of a "squirt" of hot metal.

Lower the MELTING POT and loosen the two NUTS a12H10 which hold the POT to the SWING FRAME (the figure shows a view of the bottom of the SWING FRAME).

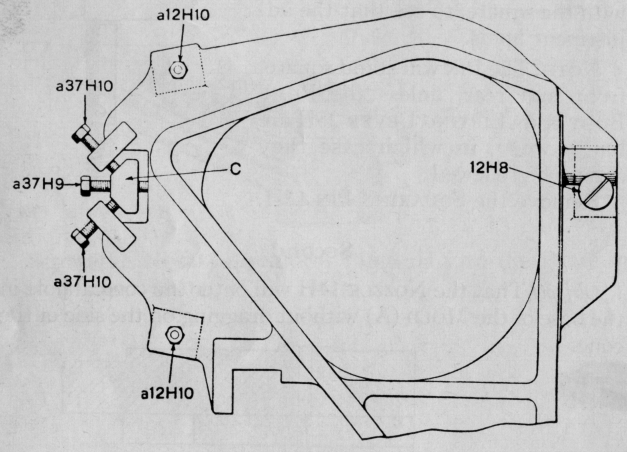

Caution: The STUD 12H8 should never be loosened; the hole in which it is located, is large enough to allow a slight movement for this adjustment.

Loosen the two SCREWS a37H10 and the SCREW a37H9. Place a packing between the top OPERATING ROD NUT 28H4 and the OPERATING-ROD LEVER 29H so that when the PUMP is raised the NOZZLE will stand about $\frac{1}{16}$" below its position for contact with the MOLD. Raise the MELTING POT into position. With the PUMP TRIP released slowly turn the MACHINE to casting position (220 degrees), noting the travel of the NOZZLE on its up stroke.

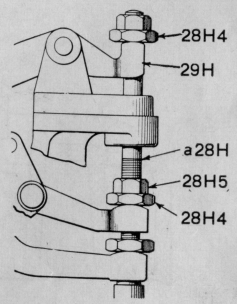

PROCEDURE

By moving the PUMP, on its supports inside the POT, to the right and left, and to the front and rear (using a large screw driver as a lever) the NOZZLE can be seen to move slightly to one side or the other of the conical hole in the MOLD BASE. The position of the POT must be adjusted so that this slight movement of the NOZZLE is equal in each direction from the center of the conical hole in the MOLD BASE.

To approximately center the NOZZLE 14H, move the METAL-POT CASING on the SWING FRAME by means of a large screw driver used as a lever. Tighten the front NUT a12H10. Lower the POT, tighten the rear NUT a12H10 and bring the SCREWS a37H10 and the SCREW a37H9 up to bearing.

Test the adjustment and, if necessary, make further adjustment by means of the two SCREWS a37H10 and the SCREW a37H9, first slacking off the two NUTS a12H10.

To move the NOZZLE to the left, slack off equally the SCREWS a37H10 and turn the SCREW a37H9 into bearing.

To move the NOZZLE to the right, turn the SCREW a37H9 out and turn equally the SCREWS a37H10 to bearing against the lug (C) on the POT.

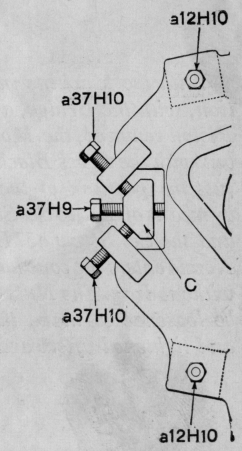

To move the NOZZLE to the rear, slack off the rear SCREW a37H10 and tighten the front SCREW a37H10.

To move the NOZZLE to the front, slack off the front SCREW a37H10 and tighten the rear SCREW a37H10.

When the NOZZLE is centered tighten the NUTS a12H10 and be sure that the SCREWS a37H9 and a37H10 have been all brought up to bearing.

Remove the packing piece from between the NUT 28H4 and LEVER 29H.

Replace the CROSS BLOCK in the MOLD.

Replace the BRIDGE (and TYPE CARRIER, if previously removed).

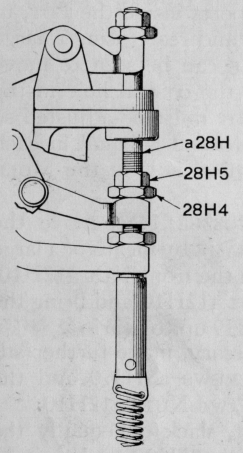

Summary: *With the Machine in casting position with the Bridge, the Mold, the Pump Piston, the Nozzle, (and the Type Carrier if desired) removed, and the Nozzle Squaring Pin 15H in the place of the Nozzle, adjust the position of the Nut 28H4 so that the Squaring Pin stands perpendicular to the top of the Main Stand.*

With the Machine in casting position, with the Bridge, and the Pump Piston removed, the Mold in position but with the Cross Block removed, adjust the position of the Melting Pot by means of the two Set Screws a37H10 and the Set Screw a37H9, so that the Nozzle enters the cone hole in the Mold without drag. The Nuts a12H10 must be loosened to make the adjustment and tightened afterward.

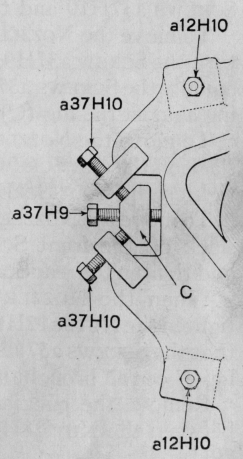

PISTON

Two Adjustments

First—position of PUMP-BODY-SPRING-ROD-CROSS-HEAD STOP 31H8.

Second: position of PUMP-BODY-SPRING-ROD STOP NUT 31H13.

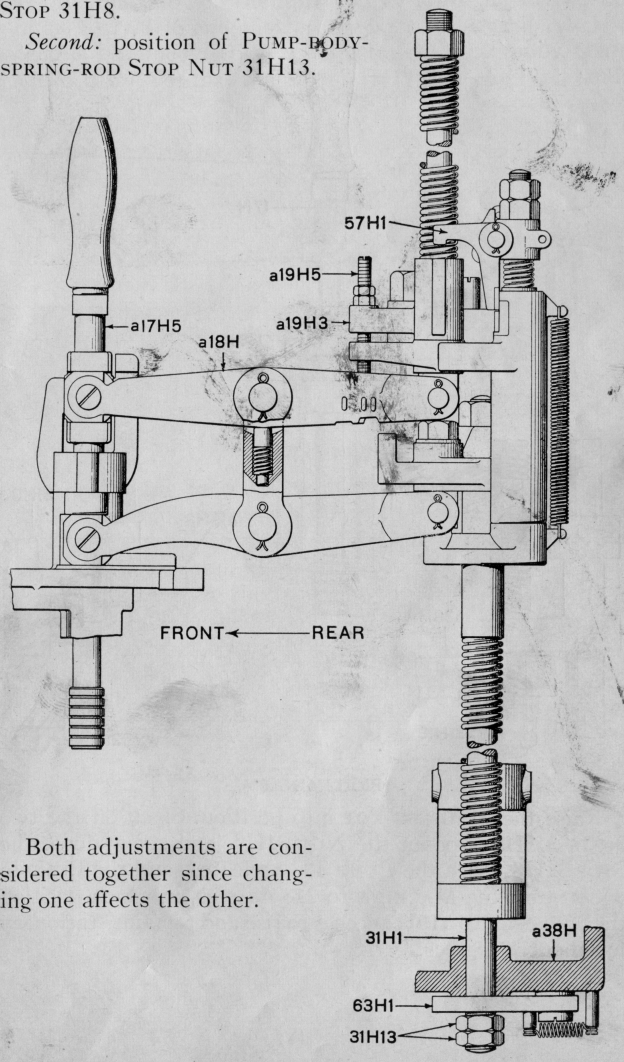

Both adjustments are considered together since changing one affects the other.

Object: That the PISTON 17H may be clamped tight up against the PUMP-BODY STOP 23H2 at all times except when the NOZZLE is in contact with the MOLD.

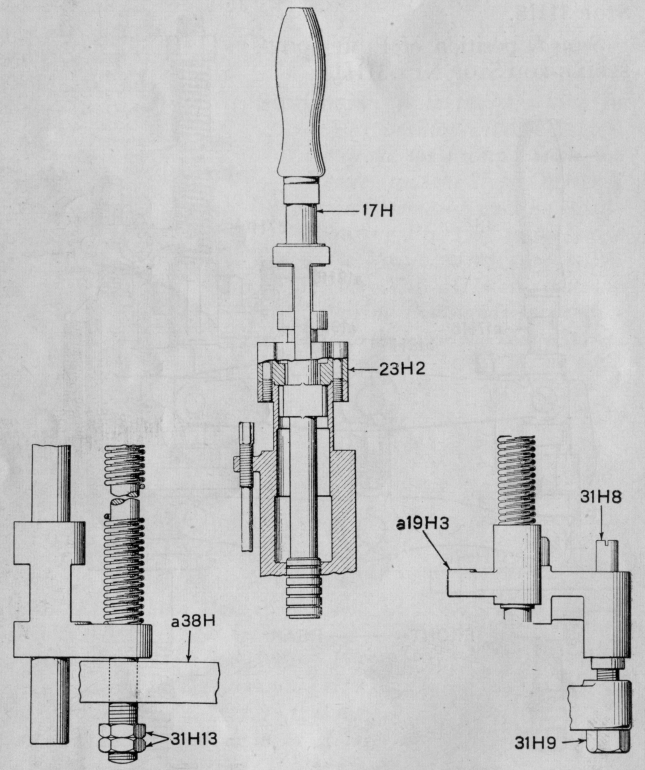

PRELIMINARY

Raise the MELTING POT into position. Slack off the two NUTS 31H13. Loosen the NUT 31H9, and screw down the STOP 31H8. With the PUMP TRIP released, and the PUMP in action turn the MACHINE to 218 degrees, in which position the CROSS-HEAD a19H3 ceases to rise and remains stationary for about 4 degrees.

At this point be sure there is $\frac{1}{32}$″ or more clearance between the bottom of the PISTON LEVER a18H and the top of the PUMP-BODY-OPERATING-ROD LEVER 29H. If there is less than $\frac{1}{32}$″ clearance loosen the upper PUMP-BODY-OPERATING-ROD LOCK NUT 28H5 and back off the NUT 28H4 until $\frac{1}{32}$″ clearance is obtained (see next adjustment PUMP-BODY OPERATING ROD). See that the NUTS 31H13 clear the POST a38H.

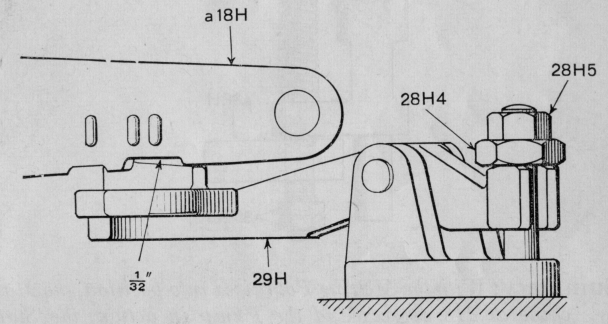

PROCEDURE

Screw up the STOP 31H8 until it just touches the CROSS-HEAD a19H3. Then screw it about ½ turn further, until the PIN 32H1 stands in the center of the hole in the LEVER a18H. This will put about $\frac{1}{64}$″ compression on the SPRING 32H4, and is indicated by the fact that the PIN 32H1 can be revolved freely with the fingers. Tighten the STOP NUT 31H9.

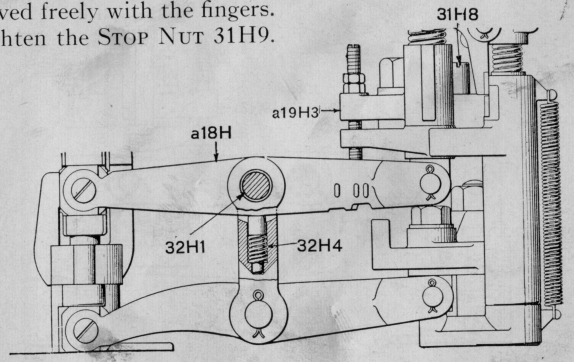

With the fingers screw the upper NUT 31H13 just up to bearing against the SWING-FRAME POST a38H and lock it with the lower NUT 31H13.

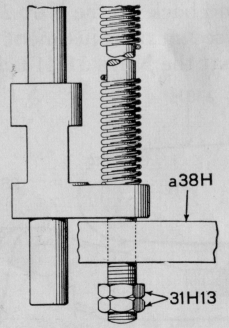

Summary: *With the Melting Pot raised into position, the Machine at 218 degrees and the Pump in action, the Stop 31H8 is screwed up against the Crosshead a19H3 until the Link Pin 32H1 is central in its hole in the Lever 18H and can be revolved freely by the fingers. Tighten the Lock Nut 31H9. Bring the upper Nut 31H13 just up to bearing on the Swing-Frame Post a38H and tighten it with the fingers only; then lock it with the lower Nut 31H13.*

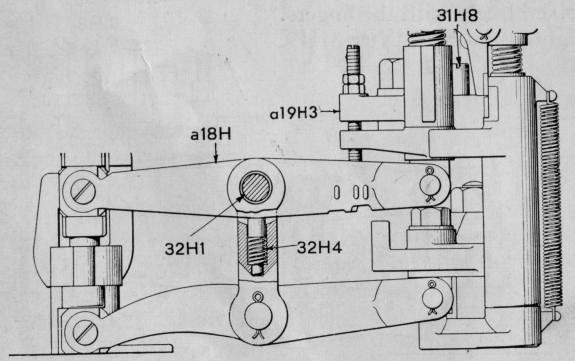

PUMP-BODY OPERATING ROD

One Adjustment—position of the OPERATING-ROD LEVER 29H.

Object: That the NOZZLE will not leave the MOLD until the PISTON is clamped at the top of its stroke.

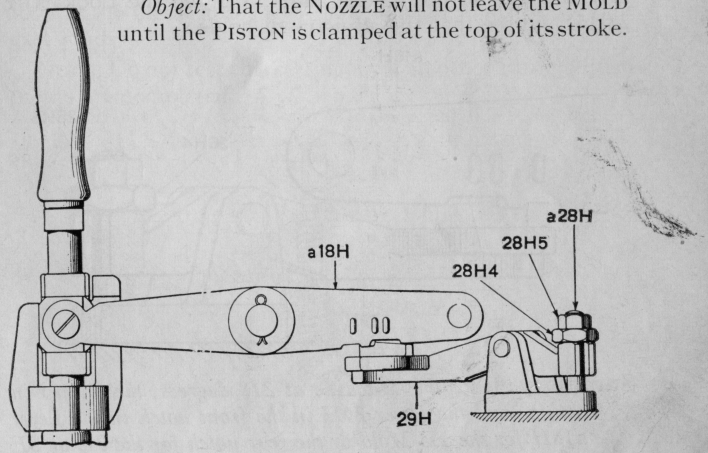

PRELIMINARY

Release the PUMP TRIP and with the PUMP in action turn the MACHINE to 218 degrees, in which position the CROSS-HEAD a19H3 ceases to rise and remains stationary for about 4 degrees.

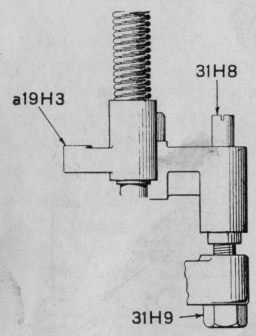

Place the left end of the LEVER 29H in one of the notches in the LEVER a18H, in the front notch if a 1E MOLD is on the MACHINE, and in the rear notch if a 2E or 3E MOLD is on the MACHINE. (These positions are designated on the LEVER a18H by one little tit over the front notch for 1E MOLDS and two little tits over the rear notch for 2E or 3E MOLDS).

This adjustment correctly made for either notch will hold good for the other, but when operating, the LEVER 29H must be placed in the correct notch according to the MOLD used.

PROCEDURE

Loosen the NUT 28H5 and adjust the NUT 28H4 on the ROD a28H until there is $\frac{1}{32}$" clearance between the top of the LEVER 29H and the LEVER a18H. Tighten the LOCK NUT 28H5, and see that the adjustment holds.

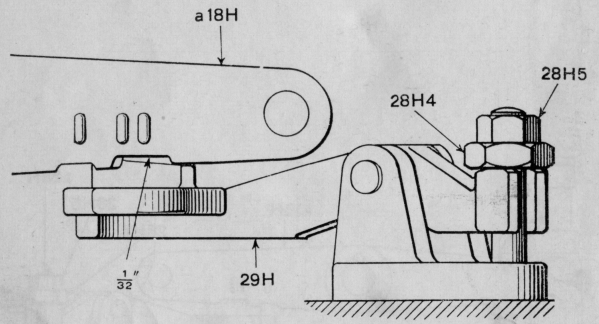

Summary: *With the Machine at 218 degrees, the Pump in action, and the Lever 29H in the front notch in the Lever a18H for the 1E Mold or the rear notch for the 2E or 3E Mold, adjust the Nuts 28H4 and 28H5 to give $\frac{1}{32}$" clearance between the Lever 29H and the Lever a18H.*

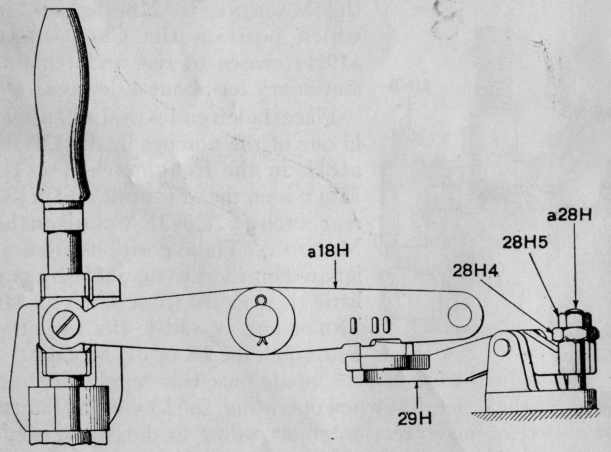

PISTON SPRING

One Adjustment—compression.

Object: That the PISTON may exert sufficient pressure in forcing the metal into the MOLD to insure that the type be cast solid.

NOTE: Do not test this setting until all other PUMP adjustments are completed.

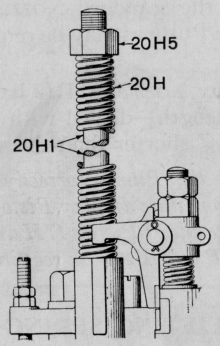

PROCEDURE

Screw down the NUT 20H5 on the ROD 20H1 to increase the pressure of the SPRING 20H.

This additional spring pressure, applied as the PISTON wears, compensates for the loss of metal which leaks past the PISTON. For running cellular matrices when the PISTON is not worn, the ROD 20H1 usually sticks out of the NUT about ¼"; for running Display, or with a worn PISTON, the ROD may stick out above the NUT an inch or more.

NOZZLE and PISTON (Display Type)

One Adjustment—to obtain a greater volume of metal.

PRELIMINARY

Remove the standard PISTON 17H and the standard NOZZLE 14H.

PROCEDURE

Put the display NOZZLE a14H2 and the display PISTON a17H5 in place of the standard NOZZLE and PISTON, and open the port in the PUMP as may be required to cast perfect type.

NOTE: The display NOZZLE a14H2 has the same size hole through its entire length—drilled with a No. 30 drill. The display PISTON is 1/8" shorter than the standard PISTON.

Summary: *Adjust the Pump correctly for casting regular composition. Substitute display Piston a17H5 and Nozzle a14H2 for the standard Piston 17H and Nozzle 14H. Open the port in the Pump Body as required.*

PUMP-BODY LIFTING SPRING (Display Type)

One Adjustment—to give increased pressure of the NOZZLE against the MOLD.

PROCEDURE

Connect the PUMP-BODY LIFTING SPRING a27H to the SWING FRAME a37H by hooking the upper hole of the SPRING PLATE a27H2 over the STUD 37H6 instead of the lower hole.

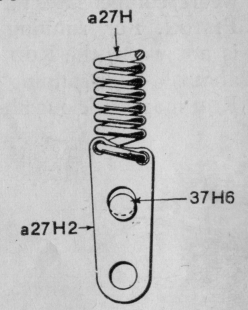

Summary: *Connect the Spring 27H to the Swing Frame a37H by the upper hole in the Plate a27H2.*

PISTON (Display Type)

Two Adjustments

First—increased length of stroke.

Second—increased compression of PISTON SPRING.

First

Object: To give the PISTON a longer stroke.

PROCEDURE

Swing the STOP BLOCK 63H1 into position to engage the SPRING ROD 31H1, interposing it between the SWING-FRAME POST a38H and the STOP NUT 31H13.

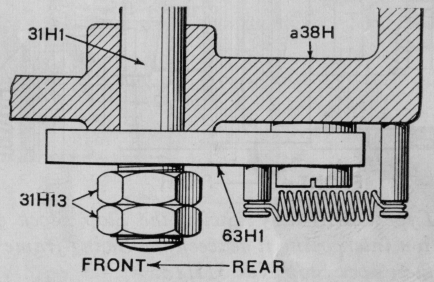

Second

Object: To quicken the action of the PISTON by delaying its action while spring pressure is accumulating.

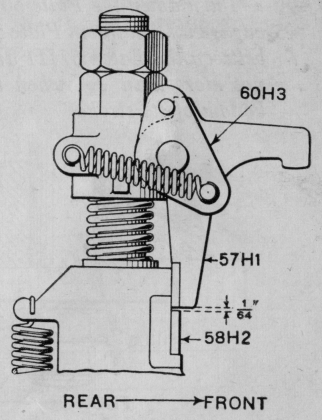

PRELIMINARY

Turn down the PLATE 60H3 so that the LATCH 57H1 will engage the ABUTMENT PLATE 58H2 and turn the MACHINE until the CROSSHEAD a19H3 is at the bottom of its stroke. Loosen the LOCK NUT over the NUT 62H4.

PROCEDURE

Adjust the NUT 62H4 so that the LATCH 57H1 will drop freely into position to engage the ABUTMENT PLATE 58H2 with not over $\frac{1}{64}$″ clearance, then tighten its LOCK NUT.

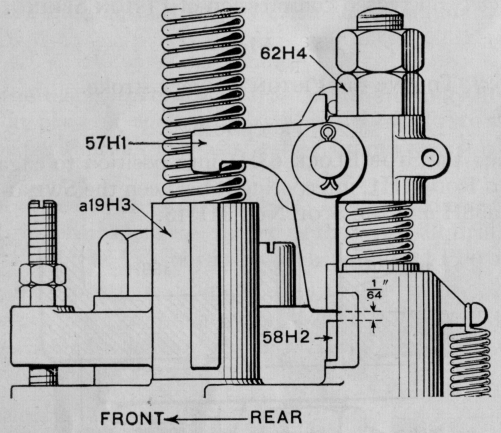

Display Type **Summary:** *Swing the Stop Block 63H1 into position interposing it between the Swing-frame Post 38H and the upper Stop Nut 31H13.*

Turn down the Plate 60H3 so that the Latch 57H1 will engage its Abutment Plate 58H2 and note that the clearance between the Latch 57H1 and the Abutment Plate 58H2 is not more than $\frac{1}{64}$″ when the Crosshead a19H3 is at the bottom of its stroke.

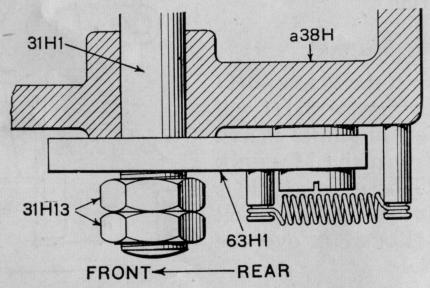

NOZZLE (Display Type)

One Adjustment—to regulate the time the NOZZLE is to remain in contact with the MOLD.

PRELIMINARY

Have a display MOLD and NOZZLE on the MACHINE. Turn the MACHINE until the CROSSHEAD a19H3 has moved up so that the clearance between it and the arms of the LATCH 57H1 is $\frac{1}{32}$″.

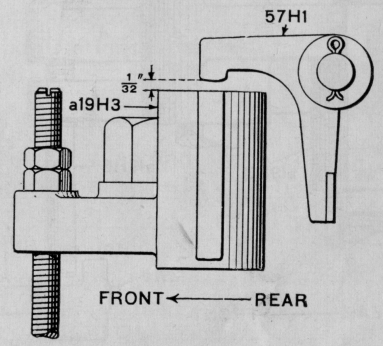

Swing the LEVER 29H as far to the rear as possible, and adjust the NUT 28H4 so that the PUMP-BODY-OPERATING-ROD LEVER 29H clears the PISTON LEVER a18H by $\frac{1}{16}$″.

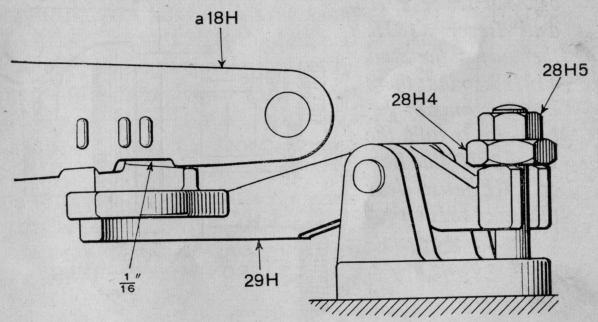

PROCEDURE

Loosen the NUTS a19H7 and a19H6.

Turn the STUD a19H5 until there is $\frac{1}{64}$" clearance between it and the LEVER 29H. Tighten the NUTS a19H6 and a19H7, and see that the adjustment holds.

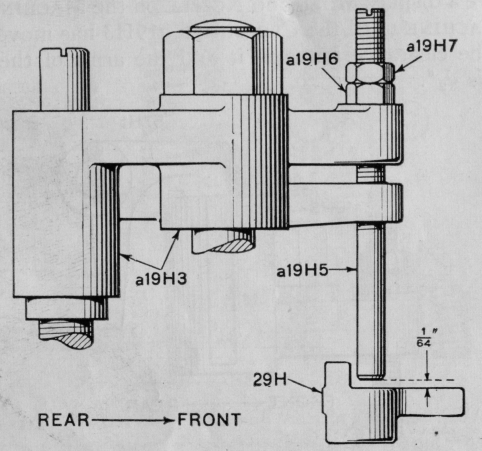

Display Type **Summary:** *Turn the Pump-body-operating-rod Lever 29H to the rear and when the Crosshead a19H3 is $\frac{1}{32}$" from the arms of the Latch 57H1, adjust the Nut 28H4 to give $\frac{1}{16}$" clearance between Lever 29H and Lever a18H, then adjust the Stud a19H5 so that there is a clearance of $\frac{1}{64}$" between it and the Lever 29H. The Lever 29H must clear the Lever 18H by $\frac{1}{16}$" when this adjustment is being made.*

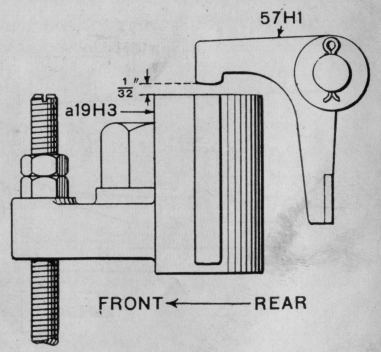

MOLD-BLADE SHIFTER

The MOLD-BLADE SHIFTER operates the LATCH of the upper MOLD BLADE of the Styles 1E, 2E or 3E MOLDS. It is necessary to move the MOLD-BLADE SHIFTER by hand to its front or rear position according as it is desired to cast type, high quads, and spaces or to cast low quads, and spaces.

Two Adjustments

First—position for casting type and high quads and spaces

Second—position for casting low quads and spaces.

First

Object: To cast type and high quads and spaces with Styles 1E and 2E MOLDS.

PROCEDURE

To cast type and high quads and spaces push forward on the EXTENSION 26C2, against the SPRING 26C5, until the rear end of the LATCH 26C6 rests against the front face of the PIN-BLOCK COVER PLATE 29C1.

Pushing the EXTENSION 26C2 forward rotates the BELL CRANK 28C1 about the STUD a24C6 thus releasing the BELL CRANK 87E1, the left end of which, through the action of the SPRING 87E7, is drawn to the rear and away from contact with the LATCH of the upper MOLD BLADE, releasing the LATCH and allowing the upper MOLD BLADE to operate with the lower MOLD BLADE, causing type or high quads and spaces to be cast.

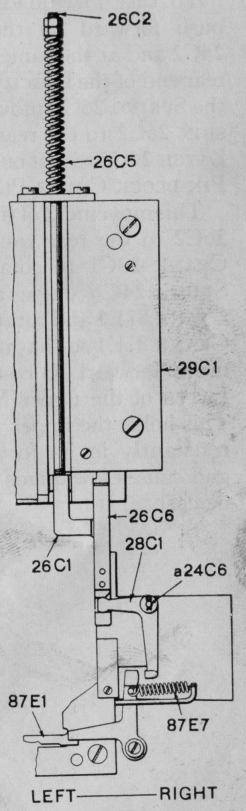

NOTE: When in the above position there should be a clearance between the front end of the BELL CRANK 28C1 and the rear end of the BELL CRANK 87E1. (See page 65).

Second

Object: To cast low quads and spaces with Styles 1E, 2E or 3E MOLDS.

PROCEDURE

To cast low quads and spaces, push forward on the EXTENSION 26C2 and at the same time raise the rear end of the LATCH 26C6, then let the SPRING 26C5 move the EXTENSION 26C2 to the rear allowing the LATCH 26C6 to rest on the top of the PIN-BLOCK COVER PLATE 29C1.

This movement of the EXTENSION 26C2 to the rear causes the BELL CRANK 28C1 to rotate about the STUD a24C6 engaging the BELL CRANK 87E1 and rotating this BELL CRANK 87E1 so that its left end will move forward to rest against the LATCH of the upper MOLD BLADE. This holds the upper MOLD BLADE constantly in its forward position and causes low quads and spaces to be cast.

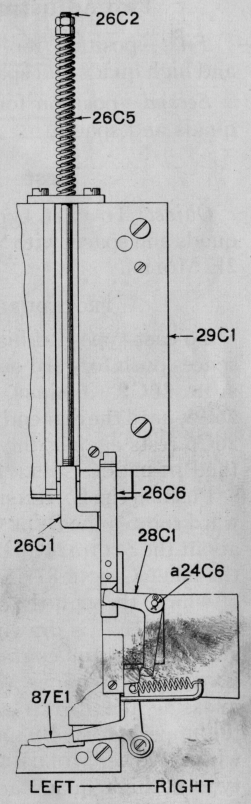

WEDGES—DISPLAY MATRICES

The WEDGES by their position fix the set-size of the character or space to be cast. It is necessary to move the WEDGES by hand to a predetermined position to obtain the set-size desired.

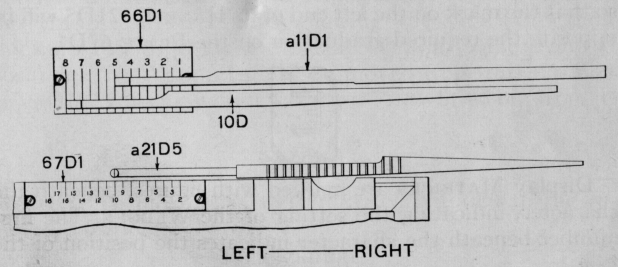

Two Adjustments

First—positioning the NORMAL WEDGE.

Second—positioning the JUSTIFICATION WEDGES.

First

Object: To move the NORMAL WEDGE to the required position.

PROCEDURE

To position the NORMAL WEDGE raise the NORMAL-WEDGE LOCKING PIN with the LIFTING HANDLE a14B12.

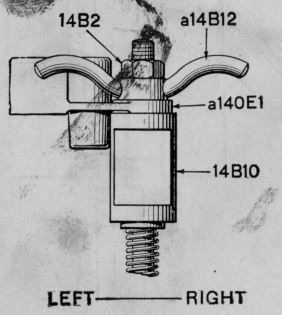

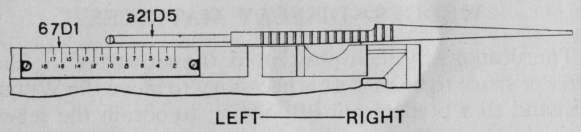

The NORMAL WEDGE can then be moved, with the hand, so that the mark on the left end of its HANDLE a21D5 will be opposite the required graduation on the PLATE 67D1.

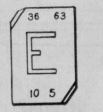

Display MATRICES are marked with figures, beneath the character, indicating the setting of the WEDGES. The first number beneath the character indicates the position of the

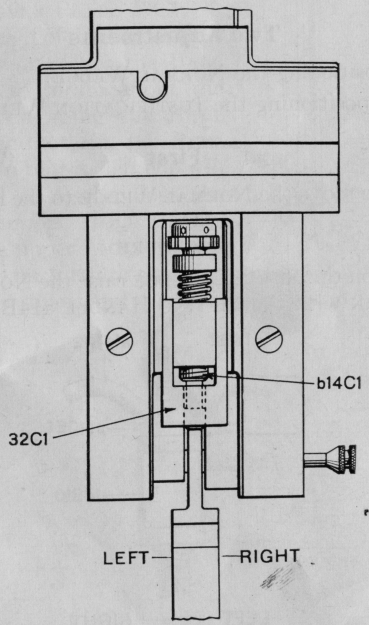

NORMAL WEDGE, as shown in the cut this is 10. When this number is preceded by an asterisk the PACKING PIECE 32C1 must be put in place between the rear end of the MOLD BLADE and the MOLD-BLADE-ABUTMENT-SLIDE ADJUSTING SCREW b14C1.

When the NORMAL WEDGE is positioned correctly release the HANDLE a14B12 thus allowing the NORMAL-WEDGE LOCKING PIN to lock the NORMAL WEDGE in the required position. The WEDGE cannot be moved from this position unless the NORMAL-WEDGE LOCKING PIN is lifted out from it.

Second

Object: To move the JUSTIFICATION WEDGES to the required position.

PROCEDURE

The JUSTIFICATION WEDGE 10D remains at all times with its left edge coinciding with the No. 8 graduation on PLATE 66D1.

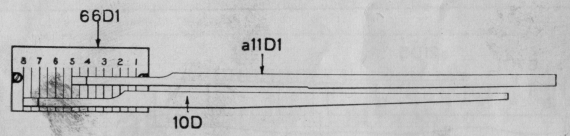

To position the JUSTIFICATION WEDGE a11D1 lift it off its tooth and move it so that its left end will coincide with the required graduation on the PLATE 66D1.

DISPLAY MATRICES are marked with figures, beneath the character, indicating the setting of the WEDGES. The second number beneath the character indicates the position of the JUSTIFICATION WEDGE a11D1; as shown in the cut this is 5.

(The figures above the character 36—63, indicate that the MATRIX is for 36-point, series 63).

The nearest setting of the Speed Regulating Device corresponding to the MATRIX marking 10—5 may be read from the INDEX PLATE on the Speed Regulating Attachment.

Summary: *Lift Handle a14B12 and move the Normal Wedge to position on Plate 67D1 shown by lower left number on Matrix. Keep Wedge 10D in No. 8 position and move Wedge a11D1 to position on Plate 66D1 shown by lower right number on Matrix. If lower left number on Matrix is starred use Packing Piece 32C1.*

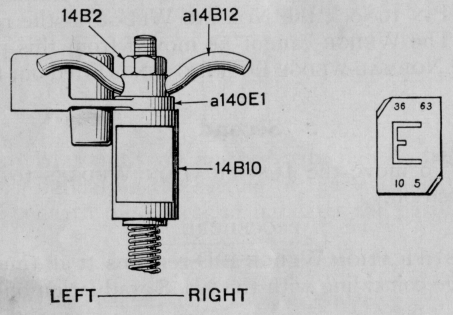

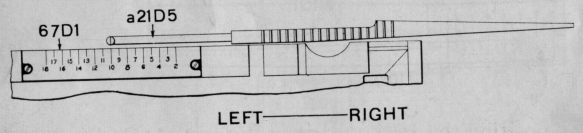

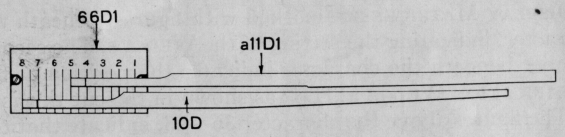

WEDGES—CELLULAR MATRICES

NOTE: The same procedure is used for positioning Wedges in casting from Cellular Matrices as from Display Matrices. However, it should be noted that all three Wedges are positioned in casting Cellular Matrices.

Wedge a11D1 is replaced with Wedge 11D and Packing Piece 32C1 is always in place.

Wedge positions are not marked on the Matrices but the inside cover of the Cellular Matrix Box contains a Wedge Positioning Chart. Separate Charts are made up for each type face and set-size. See example of chart on page 71.

Line Standard— CHARACTERS	Units	Normal Wedge b21D1D *	Justification Wedge 10D	Justification Wedge 11D	Width in Inches
i l . , ' ‘	5	5	8	6½	.0318
f j : ; ! -	6	6	7½	6½	.0382
r s t	7	6	8	5½	.0447
I c e z ?	8	7	7½	5½	.0510
J a g o x $ Figures	9	7	8	4½	.0575
S b d h k n p q u v y fi fl	10	8	7½	4½	.0638
Z ff	11	8	8	3	.0698
F L P æ	12	9	7½	3	.0762
A B C E O Q T V & w	13	9	8	2	.0827
G R U Y œ	14	10	7½	2	.0890
D H K N X m ffi ffl	15	10	8	1	.0955
M W Æ Œ	18	11	8	6	.1143

*The Abutment-screw Packing Piece 32C1 must be in position to obtain the sizes in this table.

TYPE CHANNEL BLOCKS

For casting type 12-point and smaller the standard composition TYPE CHANNEL BLOCKS Xa50F (adjustable) and Xa51F (fixed) are used.

To accommodate the larger type, and because of the change in the position of the stroke of the TYPE CARRIER, replace the fixed CHANNEL BLOCK Xa51F with the fixed CHANNEL BLOCK Xa51F14, using with it the SCREW 51F5 which is furnished as part of Xa51F. The adjustable CHANNEL BLOCK Xa50F is not changed.

The fixed CHANNEL BLOCK Xa51F14 (for type larger than 12-point) has a smooth face against which the type bears; whereas the fixed CHANNEL BLOCK Xa51F (for type 12-point and smaller) has on its face a rib to fit in the nick of the type.

SPEED REGULATING ATTACHMENT

The Speed Regulating Attachment provides changes in the speed of the Casting Machine. Type of the larger point-sizes and set-sizes require more time to cool than do the smaller sizes and this Attachment enables the Casting Machine to be operated at the maximum economical speed for each size of type.

Four Adjustments

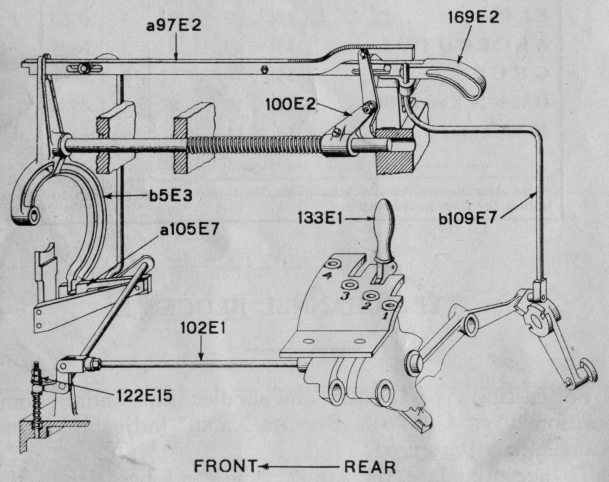

First—position of BELT SHIFTER OPERATING BAR a97E2.

Second—position of notch in CLUTCH-SHIFTER-PLATE LEVER a105E7 in relation to the lug on the BELT-SHIFTER RING b5E3.

Third—length of CLUTCH CONTROL OPERATING ROD 102E1.

Fourth—length of INTERLOCKING-LEVER OPERATING ROD b109E7.

First

Object: That the BELT will be moved onto the tight PULLEY when the TUMBLER 133E1 is in its No. 4 position and the STARTING-BAR HANDLE 169E2 is pushed to the rear to starting position.

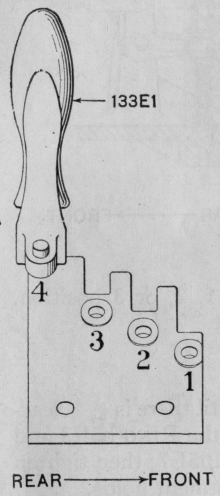

PRELIMINARY

Put the TUMBLER 133E1 in its No. 4 position and loosen the CLAMP SCREW 100E3. See that the STARTING-BAR HANDLE 169E2 is all the way to the front.

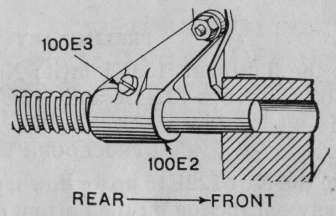

PROCEDURE

Move the BRACKET 100E2, forward or backward, until the face of the shoulder on the rear end of the OPERATING BAR a97E2 stands $\frac{1}{32}$″ in front of the face of the ledge across the notch in the upper end of the RING b5E3; then tighten the CLAMP SCREW 100E3, and see that the adjustment holds.

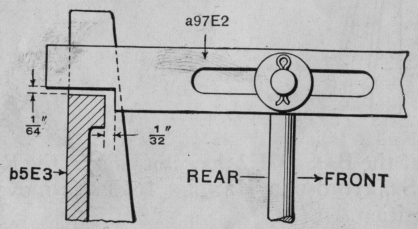

Second

Object: That the CLUTCH-SHIFTER-PLATE LEVER a105E7 will not bind on the BELT SHIFTER RING b5E3.

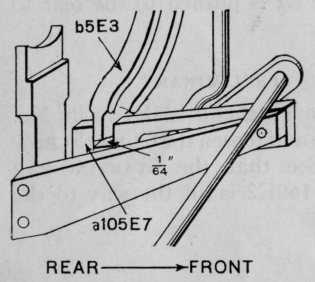

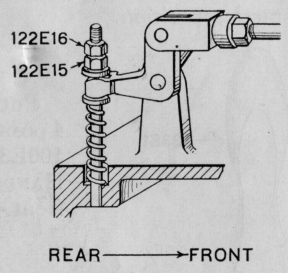

PRELIMINARY

Put the TUMBLER 133E1 in its No. 1, 2, or 3 position. Slack off the NUTS 122E16 and 122E15.

PROCEDURE

Turn the NUT 122E15 up, or down, until there is $\frac{1}{64}$" clearance between the lug on the bottom of the RING b5E3 and the bottom of the notch in the LEVER a105E7; then tighten the NUT 122E16, and see that the adjustment holds.

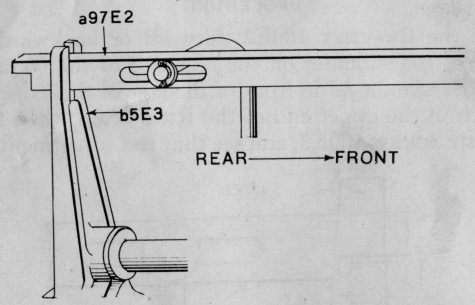

Note that the BAR a97E2 does not engage the RING b5E3 when the STARTING-BAR HANDLE 169E2 is moved to the starting position.

Third

Object: That the BELT-SHIFTER OPERATING BAR a97E2 will not bind on the BELT-SHIFTER RING b5E3.

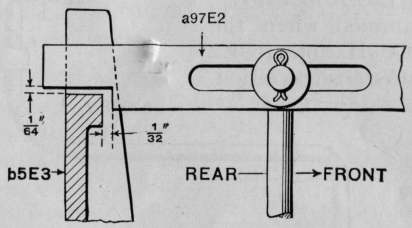

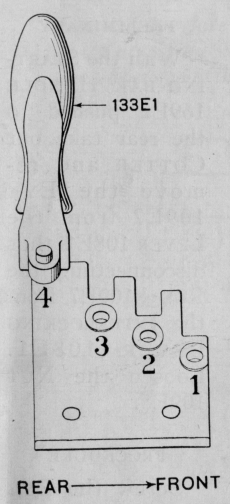

PRELIMINARY

Put the TUMBLER 133E1 in its No. 4 position. See that the STARTING-BAR HANDLE 169E2 is all the way to the front. Loosen the NUT 102E3.

PROCEDURE

Screw the ROD 102E1 into, or out from its EYE 102E2 until there is $\frac{1}{64}$" clearance between the under face of the notch in the rear end of the BAR a97E2 and the bottom of the slot in the RING b5E3; then tighten the NUT 102E3, and see that the adjustment holds.

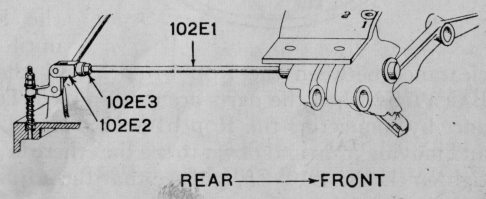

Fourth

Object: That neither the INTERLOCKING LEVER 108E1 nor the OPERATING ROD b109E7 will be jammed when the STARTING-BAR HANDLE 169E2 is moved into starting position.

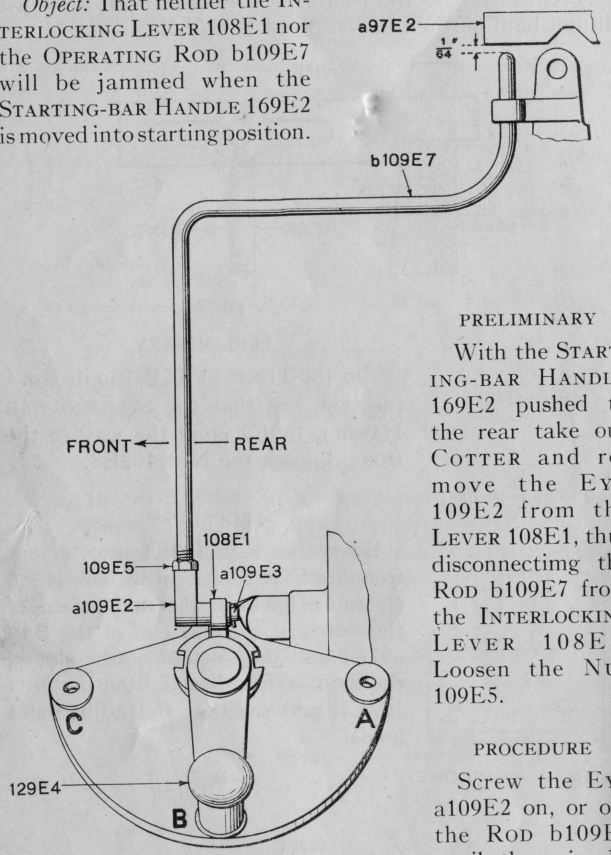

PRELIMINARY

With the STARTING-BAR HANDLE 169E2 pushed to the rear take out COTTER and remove the EYE 109E2 from the LEVER 108E1, thus disconnectimg the ROD b109E7 from the INTERLOCKING LEVER 108E1. Loosen the NUT 109E5.

PROCEDURE

Screw the EYE a109E2 on, or off, the ROD b109E7 until there is $\frac{1}{64}$" clearance between the ROD b109E7 and the OPERATING BAR a97E2 when the parts are reassembled. Test this clearance by connecting the ROD b109E7 to the LEVER 108E1, and moving it up and down to see that there is $\frac{1}{64}$" play; then tighten the NUT 109E5, and see that the adjustment holds.

Test this adjustment, with the TUMBLER 133E1 in its No. 1, 2, and 3 positions and the QUADRANT HANDLE 129E4 in each of its three positions, A, B, and C. If for any of these positions the clearance is less than $\frac{1}{64}$" readjust the EYE a109E2 on the ROD b109E7 to give that clearance for the closest position.

Summary: *With the Tumbler 133E1 in its No. 4 position and the Starting-bar Handle 169E2 all the way to the front, adjust the Bracket 100E2 so that the face of the shoulder on the rear end of the Operating Bar a97E2 stands $\frac{1}{32}$" in front of the face of the ledge across the notch in the upper end of the Ring b5E3.*

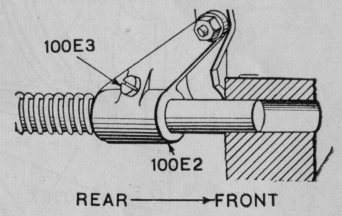

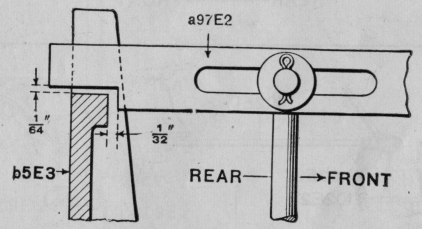

With the Tumbler 133E1 in its No. 1, 2, or 3 position, adjust the Nut 122E15 to give $\frac{1}{64}$" clearance between the

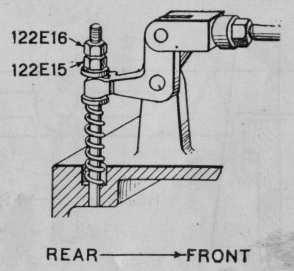

lug on the bottom of the Ring b53E and the bottom of the notch in the Lever a105E7.

With the Tumbler 133E1 in its No. 4 position, with the Starting-bar Handle 169E2 all the way to the front, adjust the Rod 102E1 to give $\frac{1}{64}$" clearance between the under face of the notch in the Operating Bar a97E2 and the bottom of the slot in the Ring b5E3.

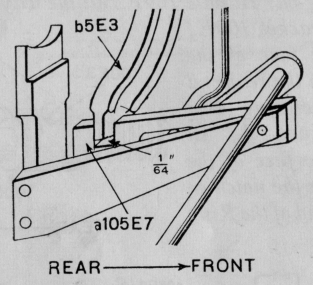

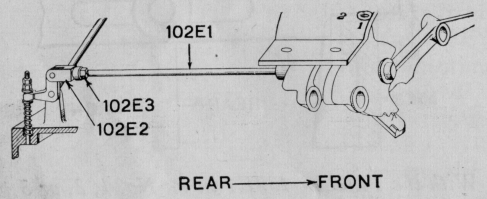

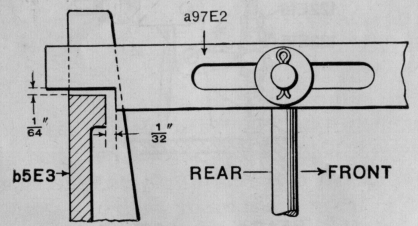

With the Starting-bar Handle 169E2 pushed to the rear, screw the Eye a109E2 on or off the Rod b109E7 to give $\frac{1}{64}$" clearance between this Rod b109E7 and the Operating Bar a97E2.

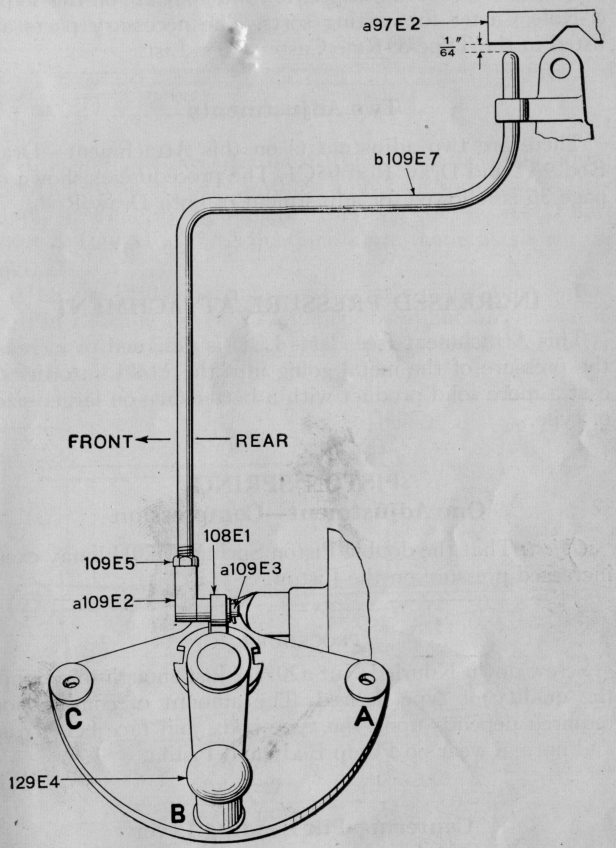

5 to 12 POINT MATRIX CASE POSITIONING ATTACHMENT

This attachment is designed to provide a means for using a complete standard composition Matrix Case on the Type-&-Rule Caster for casting sorts. The necessary parts are listed in the Type-&-Rule Caster Parts List.

Two Adjustments

There are two adjustments on this Attachment—Draw Rod 9A1 and Draw Rod b5C1. The procedure as shown on page 36 is followed for adjustment of both Draw Rods.

INCREASED PRESSURE ATTACHMENT

This Attachment (see Parts List) is designed to increase the pressure of the metal going into the Mold. in order to cast a more solid product with a better face on larger sizes of type.

PISTON SPRING
One Adjustment—Compression

Object: That the double Piston Spring Xa20H9 may exert increased pressure on the Piston.

PROCEDURE

Screw down Knurled Nut a20H12 just enough to produce the quality of type desired. The amount of compression required depends upon the type body and face being cast and normal wear on Pump Body and Piston.

Centering-Pin Loading Lever

Object: That the Centering-Pin Loading Lever will exert enough pressure so that the Matrix will not be raised from the Mold by the increased pressure of the type metal.

PROCEDURE

This Attachment includes the Pump Body X23H9 and Piston X17H7 ($1\frac{1}{16}$″). The Attachment may, however, be used with Standard Pump Body and Piston with equally good results on smaller sizes of type.

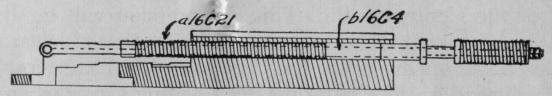

To insure positive ejection of type from the mold, more particularly on 3U Cored Molds a heavier Spring a16C21 is supplied. This Spring replaces the long Spring a16C2 and Short Spring a16C17. Adjustments are made as shown on page 22.

After the Bridge Settings are correctly made, the Centering Pin Loading Lever X275E may be applied as shown in the illustration. This is held in place only by the Bridge Lever Link Pin Xa3A2.

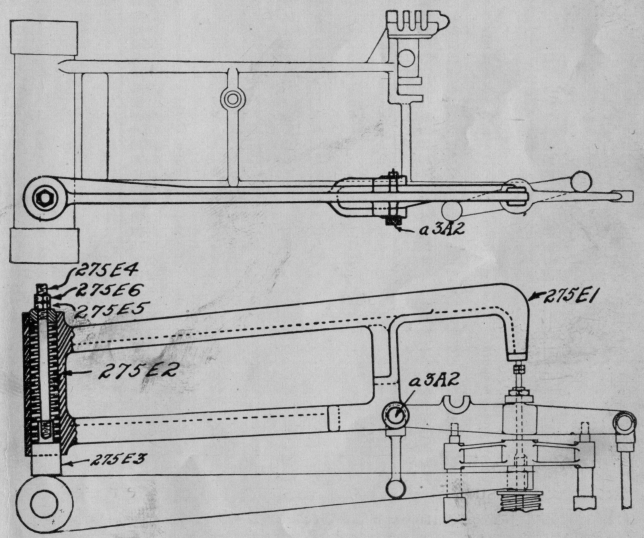

Adjust the Centering Pin Loading Lever by means of the two nuts 275E5 and 275X6 on its left end so that when the Centering Pin Lever is at the bottom of its stroke there is approximately the same amount of compression on the Spring in the left end of this Lever as there is between the Centering Pin Lever and the adjusting nut 5A1 on the upper end of the Centering Pin. This compression will be about $\frac{1}{16}$″. After making this adjustment, be sure there is clearance between the upper end of the Centering Pin Extension and the right end of the Centering Pin Loading Lever when the Centering Pin Lever is at the top of its stroke. This clearance should be about $\frac{1}{32}$″ although more clearance will be all right.

An Adjusting Screw a275E8 and Lock Nut a275E9, not shown in the illustration, have been added in the bottom of the Plunger a275E3. These are adjusted to take up any variation in the parts so that when Nuts 275E5 and 275E6 are adjusted, the Plunger a275E3 will be about half way out from its hole in the Lever. The adjustment of this Adjusting Screw and of the Nuts 275E5 and 275E6 should be made together, since changing one affects the adjustment of the other.

Wedge Positions for Casting Sorts from Cellular Matrices

Width in Inches	Normal Wedge b21D1D	Front Just. Wedge 10D	Rear Just. Wedge 11D
.0193	5	7½	1½
.0198	5	7½	2
.0203	5	7½	2½
.0208	5	7½	3
.0213	5	7½	3½
.0218	5	7½	4
.0223	5	7½	4½
.0228	5	7½	5
.0233	5	7½	5½
.0238	5	7½	6
.0243	5	7½	6½
.0248	5	7½	7
.0253	5	7½	7½
.0258	5	7½	8
.0263	5	8	1
.0268	5	8	1½
.0273	5	8	2
.0278	5	8	2½
.0283	5	8	3
.0288	5	8	3½
.0293	5	8	4
.0298	5	8	4½
.0303	5	8	5
.0308	5	8	5½
.0313	5	8	6
.0318	5	8	6½
.0323	5	8	7
.0328	5	8	7½
.0333	5	8	8
.0337	6	7½	2
.0342	6	7½	2½
.0347	6	7½	3
.0352	6	7½	3½
.0357	6	7½	4
.0362	6	7½	4½
.0367	6	7½	5
.0372	6	7½	5½
.0377	6	7½	6
.0382	6	7½	6½
.0387	6	7½	7
.0392	6	7½	7½
.0397	6	7½	8
.0402	6	8	1
.0407	6	8	1½
.0412	6	8	2
.0417	6	8	2½
.0422	6	8	3
.0427	6	8	3½
.0432	6	8	4
.0437	6	8	4½
.0442	6	8	5
.0447	6	8	5½
.0452	6	8	6
.0457	6	8	6½
.0462	6	8	7
.0467	6	8	7½
.0472	6	8	8
.0475	7	7½	2
.0480	7	7½	2½
.0485	7	7½	3
.0490	7	7½	3½
.0495	7	7½	4
.0500	7	7½	4½
.0505	7	7½	5
.0510	7	7½	5½
.0515	7	7½	6
.0520	7	7½	6½
.0525	7	7½	7
.0530	7	7½	7½
.0535	7	7½	8
.0540	7	8	1
.0545	7	8	1½
.0550	7	8	2
.0555	7	8	2½
.0560	7	8	3
.0565	7	8	3½
.0570	7	8	4
.0575	7	8	4½
.0580	7	8	5
.0585	7	8	5½
.0590	7	8	6
.0595	7	8	6½
.0600	7	8	7
.0605	7	8	7½
.0610	7	8	8
.0613	8	7½	2
.0618	8	7½	2½
.0623	8	7½	3
.0628	8	7½	3½
.0633	8	7½	4
.0638	8	7½	4½
.0643	8	7½	5
.0648	8	7½	5½
.0653	8	7½	6
.0658	8	7½	6½
.0663	8	7½	7
.0668	8	7½	7½
.0673	8	7½	8
.0678	8	8	1
.0683	8	8	1½
.0688	8	8	2
.0693	8	8	2½
.0698	8	8	3
.0703	8	8	3½
.0708	8	8	4
.0713	8	8	4½
.0718	8	8	5
.0723	8	8	5½
.0728	8	8	6
.0733	8	8	6½
.0738	8	8	7
.0743	8	8	7½
.0748	8	8	8
.0752	9	7½	2
.0757	9	7½	2½
.0762	9	7½	3
.0767	9	7½	3½
.0772	9	7½	4
.0777	9	7½	4½
.0782	9	7½	5
.0787	9	7½	5½
.0792	9	7½	6
.0797	9	7½	6½
.0802	9	7½	7
.0807	9	7½	7½
.0812	9	7½	8
.0817	9	8	1
.0822	9	8	1½
.0827	9	8	2
.0832	9	8	2½
.0837	9	8	3
.0842	9	8	3½
.0847	9	8	4
.0852	9	8	4½
.0857	9	8	5
.0862	9	8	5½
.0867	9	8	6
.0872	9	8	6½
.0877	9	8	7
.0882	9	8	7½
.0887	9	8	8
.0890	10	7½	2
.0895	10	7½	2½
.0900	10	7½	3
.0905	10	7½	3½
.0910	10	7½	4
.0915	10	7½	4½
.0920	10	7½	5
.0925	10	7½	5½
.0930	10	7½	6
.0935	10	7½	6½
.0940	10	7½	7
.0945	10	7½	7½
.0950	10	7½	8
.0955	10	8	1
.0960	10	8	1½
.0965	10	8	2
.0970	10	8	2½
.0975	10	8	3
.0980	10	8	3½
.0985	10	8	4
.0990	10	8	4½
.0995	10	8	5
.1000	10	8	5½
.1005	10	8	6
.1010	10	8	6½
.1015	10	8	7
.1020	10	8	7½
.1025	10	8	8
.1028	11	7½	2
.1033	11	7½	2½
.1038	11	7½	3
.1043	11	7½	3½
.1048	11	7½	4
.1053	11	7½	4½
.1058	11	7½	5
.1063	11	7½	5½
.1068	11	7½	6
.1073	11	7½	6½
.1078	11	7½	7
.1083	11	7½	7½
.1088	11	7½	8
.1093	11	8	1
.1098	11	8	1½
.1103	11	8	2
.1108	11	8	2½
.1113	11	8	3
.1118	11	8	3½
.1123	11	8	4
.1128	11	8	4½
.1133	11	8	5
.1138	11	8	5½
.1143	11	8	6
.1148	11	8	6½
.1153	11	8	7
.1158	11	8	7½
.1163	11	8	8
.1167	12	7½	2
.1172	12	7½	2½
.1177	12	7½	3
.1182	12	7½	3½
.1187	12	7½	4
.1192	12	7½	4½
.1197	12	7½	5
.1202	12	7½	5½
.1207	12	7½	6
.1212	12	7½	6½
.1217	12	7½	7
.1222	12	7½	7½
.1227	12	7½	8
.1232	12	8	1
.1237	12	8	1½
.1242	12	8	2
.1247	12	8	2½
.1252	12	8	3
.1257	12	8	3½
.1262	12	8	4
.1267	12	8	4½
.1272	12	8	5
.1277	12	8	5½
.1282	12	8	6
.1287	12	8	6½
.1292	12	8	7
.1297	12	8	7½
.1302	12	8	8
.1305	13	7½	2
.1310	13	7½	2½
.1315	13	7½	3
.1320	13	7½	3½
.1325	13	7½	4
.1330	13	7½	4½
.1335	13	7½	5
.1340	13	7½	5½
.1345	13	7½	6
.1350	13	7½	6½
.1355	13	7½	7
.1360	13	7½	7½
.1365	13	7½	8
.1370	13	8	1
.1375	13	8	1½
.1380	13	8	2
.1385	13	8	2½
.1390	13	8	3
.1395	13	8	3½
.1400	13	8	4
.1405	13	8	4½
.1410	13	8	5
.1415	13	8	5½
.1420	13	8	6
.1425	13	8	6½
.1430	13	8	7
.1435	13	8	7½
.1440	13	8	8
.1443	14	7½	2
.1448	14	7½	2½
.1453	14	7½	3
.1458	14	7½	3½
.1463	14	7½	4
.1468	14	7½	4½
.1473	14	7½	5
.1478	14	7½	5½
.1483	14	7½	6
.1488	14	7½	6½
.1493	14	7½	7
.1498	14	7½	7½
.1503	14	7½	8
.1508	14	8	1
.1513	14	8	1½
.1518	14	8	2
.1523	14	8	2½
.1528	14	8	3
.1533	14	8	3½
.1538	14	8	4
.1543	14	8	4½
.1548	14	8	5
.1553	14	8	5½
.1558	14	8	6
.1563	14	8	6½
.1568	14	8	7
.1573	14	8	7½
.1578	14	8	8
.1582	15	7½	2
.1587	15	7½	2½
.1592	15	7½	3
.1597	15	7½	3½
.1602	15	7½	4
.1607	15	7½	4½
.1612	15	7½	5
.1617	15	7½	5½
.1622	15	7½	6
.1627	15	7½	6½
.1632	15	7½	7
.1637	15	7½	7½
.1642	15	7½	8
.1647	15	8	1
.1652	15	8	1½
.1657	15	8	2
.1662	15	8	2½
.1667	15	8	3
.1672	15	8	3½
.1677	15	8	4
.1682	15	8	4½
.1687	15	8	5
.1692	15	8	5½
.1697	15	8	6
.1702	15	8	6½
.1707	15	8	7
.1712	15	8	7½
.1717	15	8	8
.1720	16	7½	2

The Abutment-screw PACKING PIECE 32C1 must be in position to obtain the sizes in this table. Table of WEDGE positions for casting sorts for all sizes from five units of five-set to eighteen units of twelve-and-one-half-set. For some sizes the MOLD-BLADE ABUTMENT SCREW must be adjusted.

Monotype Display Type Wedge Positions for Casting Type Bodies 2¼ to 36 Points in Width

Width in Points	Width in Inches	Wedge b21D1D Position	Wedge a11D1 Position	Width in Inches	Width in Points
* 2¼	.0311	2	2	.2663	19¼
* 2½	.0346	2	4	.2698	19½
* 2¾	.0380	2	6	.2732	19¾
* 3	.0415	2	8	.2767	20
* 3¼	.0450	3	2	.2801	20¼
* 3½	.0484	3	4	.2836	20½
* 3¾	.0519	3	6	.2870	20¾
* 4	.0553	3	8	.2905	21
* 4¼	.0588	4	2	.2940	21¼
* 4½	.0623	4	4	.2974	21½
* 4¾	.0657	4	6	.3009	21¾
* 5	.0692	4	8	.3043	22
* 5¼	.0726	5	2	.3078	22¼
* 5½	.0761	5	4	.3113	22½
* 5¾	.0795	5	6	.3147	22¾
* 6	.0830	5	8	.3182	23
* 6¼	.0865	6	2	.3216	23¼
* 6½	.0899	6	4	.3251	23½
* 6¾	.0934	6	6	.3285	23¾
* 7	.0968	6	8	.3320	24
* 7¼	.1003	7	2	.3355	24¼
* 7½	.1038	7	4	.3389	24½
* 7¾	.1072	7	6	.3424	24¾
* 8	.1107	7	8	.3458	25
* 8¼	.1141	8	2	.3493	25¼
* 8½	.1176	8	4	.3528	25½
* 8¾	.1210	8	6	.3562	25¾
* 9	.1245	8	8	.3597	26
* 9¼	.1280	9	2	.3631	26¼
* 9½	.1314	9	4	.3666	26½
* 9¾	.1349	9	6	.3700	26¾
*10	.1383	9	8	.3735	27
*10¼	.1418	10	2	.3770	27¼
*10½	.1453	10	4	.3804	27½

Width in Points	Width in Inches	Wedge b21D1D Position	Wedge a11D1 Position	Width in Inches	Width in Points
*10¾	.1487	10	6	.3839	27¾
*11	.1522	10	8	.3873	28
*11¼	.1556	11	2	.3908	28¼
*11½	.1591	11	4	.3943	28½
*11¾	.1625	11	6	.3977	28¾
*12	.1660	11	8	.4012	29
*12¼	.1695	12	2	.4046	29¼
*12½	.1729	12	4	.4081	29½
*12¾	.1764	12	6	.4115	29¾
*13	.1798	12	8	.4150	30
*13¼	.1833	13	2	.4185	30¼
*13½	.1868	13	4	.4219	30½
*13¾	.1902	13	6	.4254	30¾
*14	.1937	13	8	.4288	31
*14¼	.1971	14	2	.4323	31¼
*14½	.2006	14	4	.4358	31½
*14¾	.2040	14	6	.4392	31¾
*15	.2075	14	8	.4427	32
*15¼	.2110	15	2	.4461	32¼
*15½	.2144	15	4	.4496	32½
*15¾	.2179	15	6	.4530	32¾
*16	.2213	15	8	.4565	33
*16¼	.2248	16	2	.4600	33¼
*16½	.2283	16	4	.4634	33½
*16¾	.2317	16	6	.4669	33¾
*17	.2352	16	8	.4703	34
*17¼	.2386	17	2	.4738	34¼
*17½	.2421	17	4	.4773	34½
*17¾	.2455	17	6	.4807	34¾
*18	.2490	17	8	.4842	35
*18¼	.2525	18	2	.4876	35¼
*18½	.2559	18	4	.4911	35½
*18¾	.2594	18	6	.4945	35¾
*19	.2628	18	8	.4980	36

*PACKING PIECE 32C1 must be in position to obtain this set-size.

Removing the PACKING PIECE increases the set-size seventeen points. To avoid duplicating the central columns giving WEDGE positions the sizes produced with the PACKING PIECE in place are given to the left of the WEDGE positions and the sizes without the PACKING PIECE to the right.

To obtain set sizes above 36 points the Adjusting Screw b14C1 must be readjusted. These sizes are as follows:

Points	36¼	36½	36¾	37	37¼	37½	37¾	38	38¼	38½	38¾	39
Inches	.5015	.5049	.5084	.5118	.5153	.5188	.5222	.5257	.5291.	.5326	.5360	.5395

NOTE: To obtain the width in inches of any eighth point size subtract .0017 from the next larger quarter point size. To obtain the setting of the WEDGES for any eighth point size take the setting for the next larger quarter point size and subtract one from the position of the WEDGE a11D1. Thus the WEDGE position for two and seven-eigths points is 2-7.

NOTES

NOTES

NOTES


For fine adjustments screws
short end goes on right side up & down
long end goes on left side in or out